8800 Series 12 Pins U-CHANGE Cam Lock

Models: 8885, 8887, 8889

8085-8889 dimensions (sheet 1)

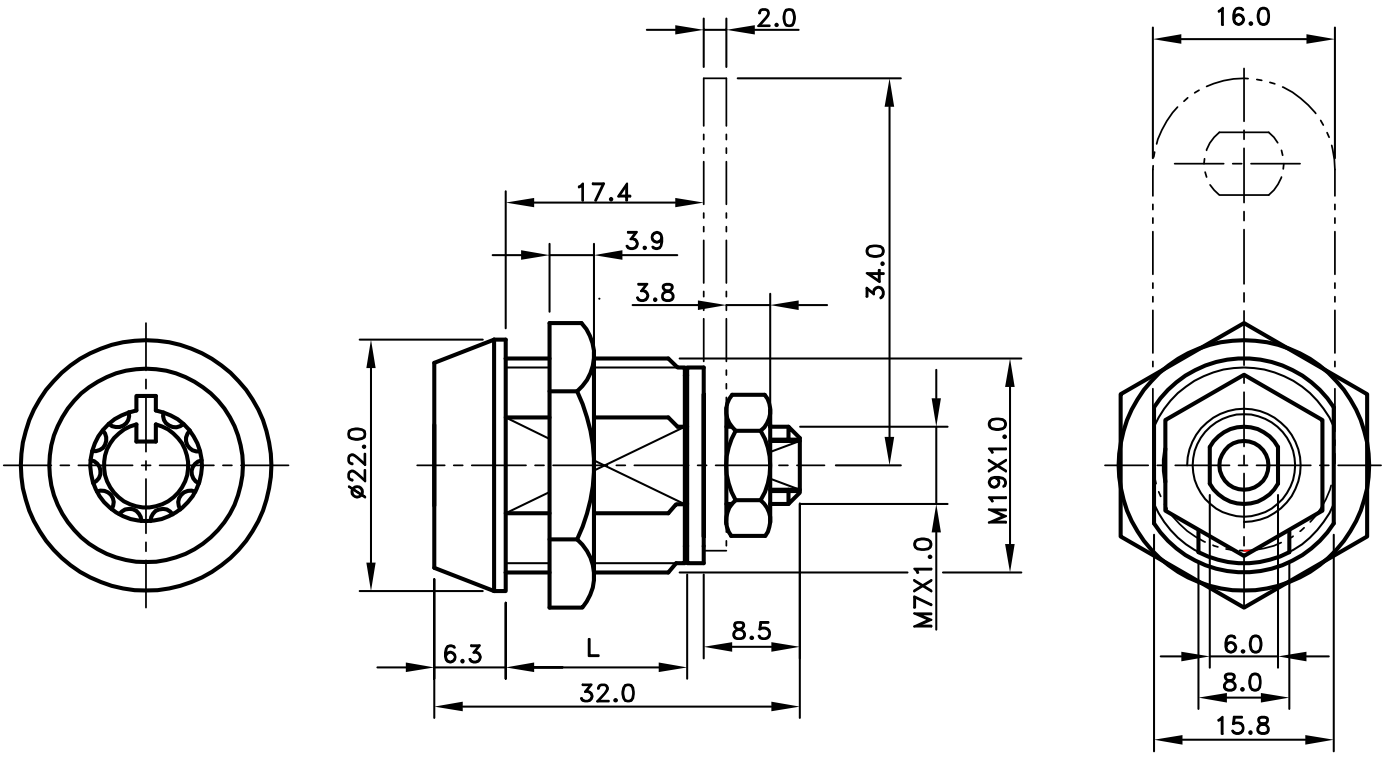

Dimensions in millimetres (mm). Drawing from the Baton Operator Catalogue (red), page 53. Specifications may change without notice.

8800 Series 12 Pins U-CHANGE Cam Lock

Models: 8885, 8887, 8889

8085-8889 dimensions (sheet 2)

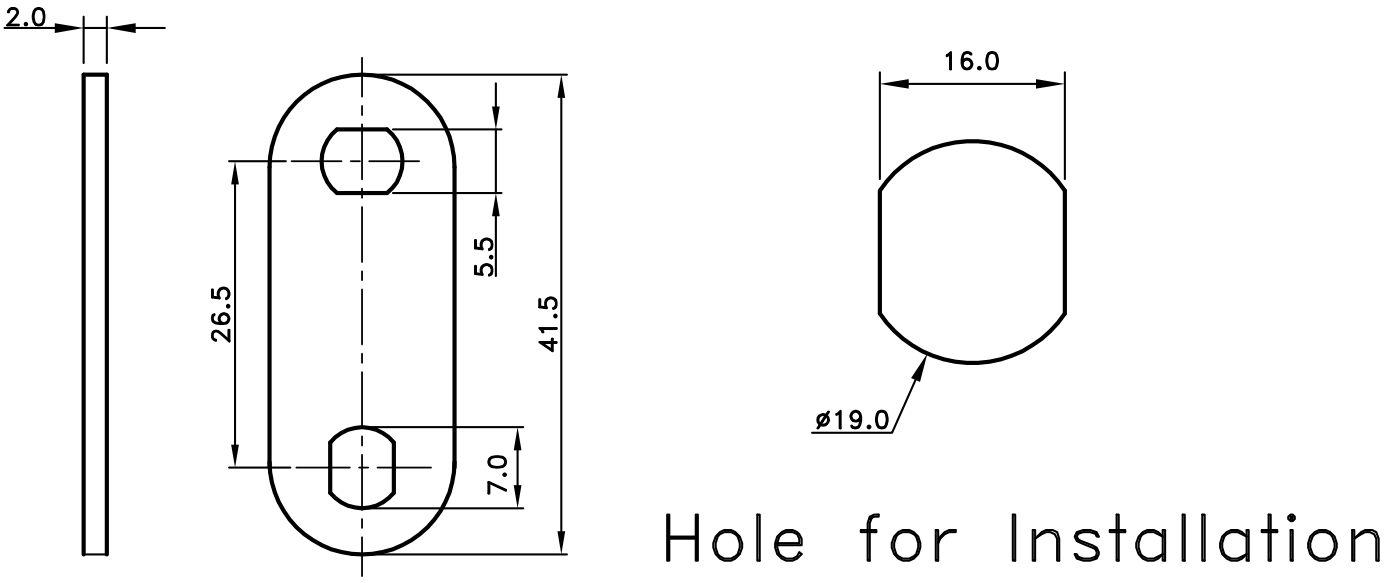

8800 Series 12 Pins U-CHANGE Cam Lock

Models: 8885, 8887, 8889

8000 series construction — cross-section view

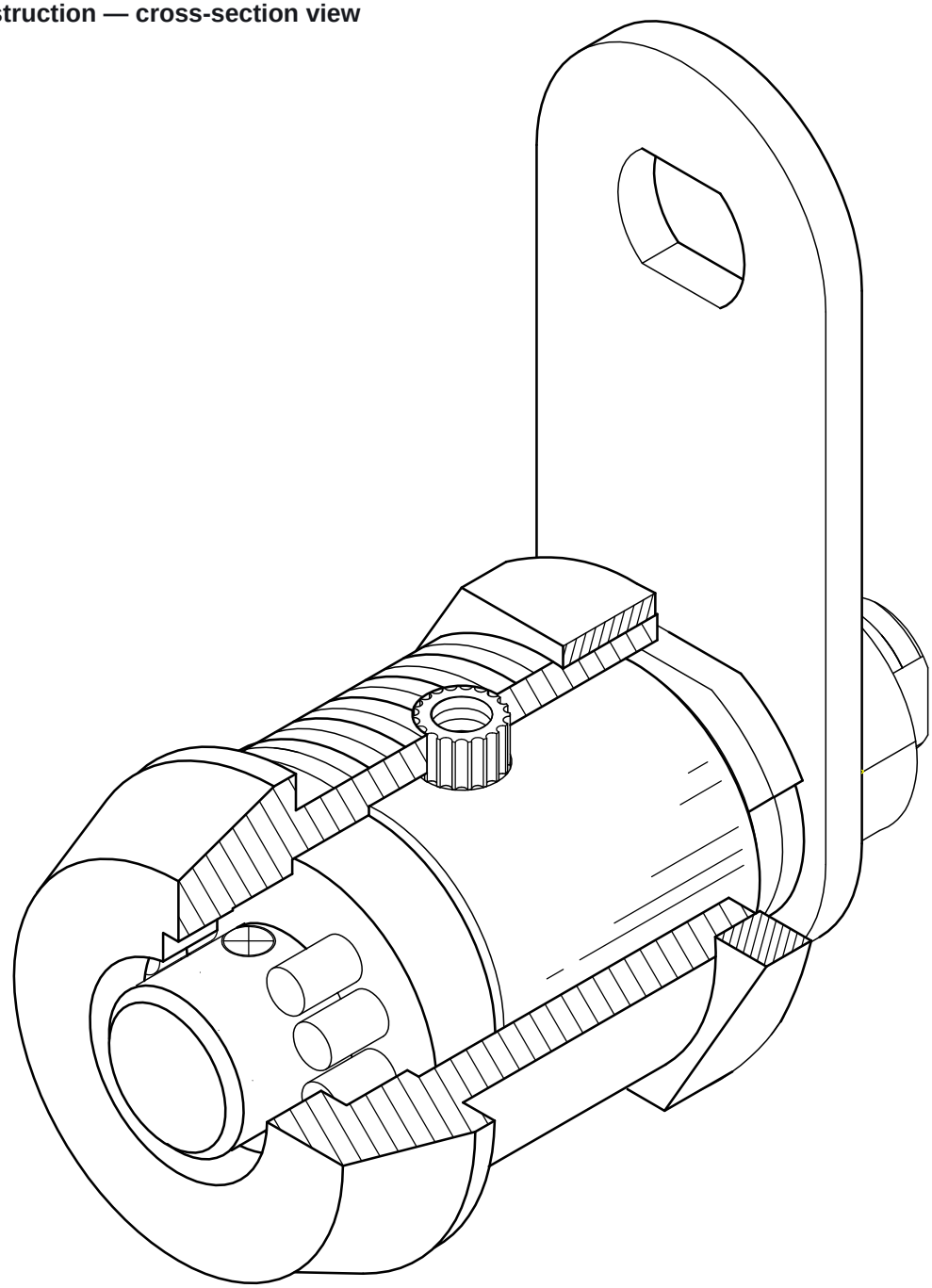

8800 Series 12 Pins U-CHANGE Cam Lock

Models: 8885, 8887, 8889

8000 series construction — exploded view

