8800 Series 10 Pins Cam Lock

Models: 8085, 8087, 8089

8085-8889 dimensions (sheet 1)

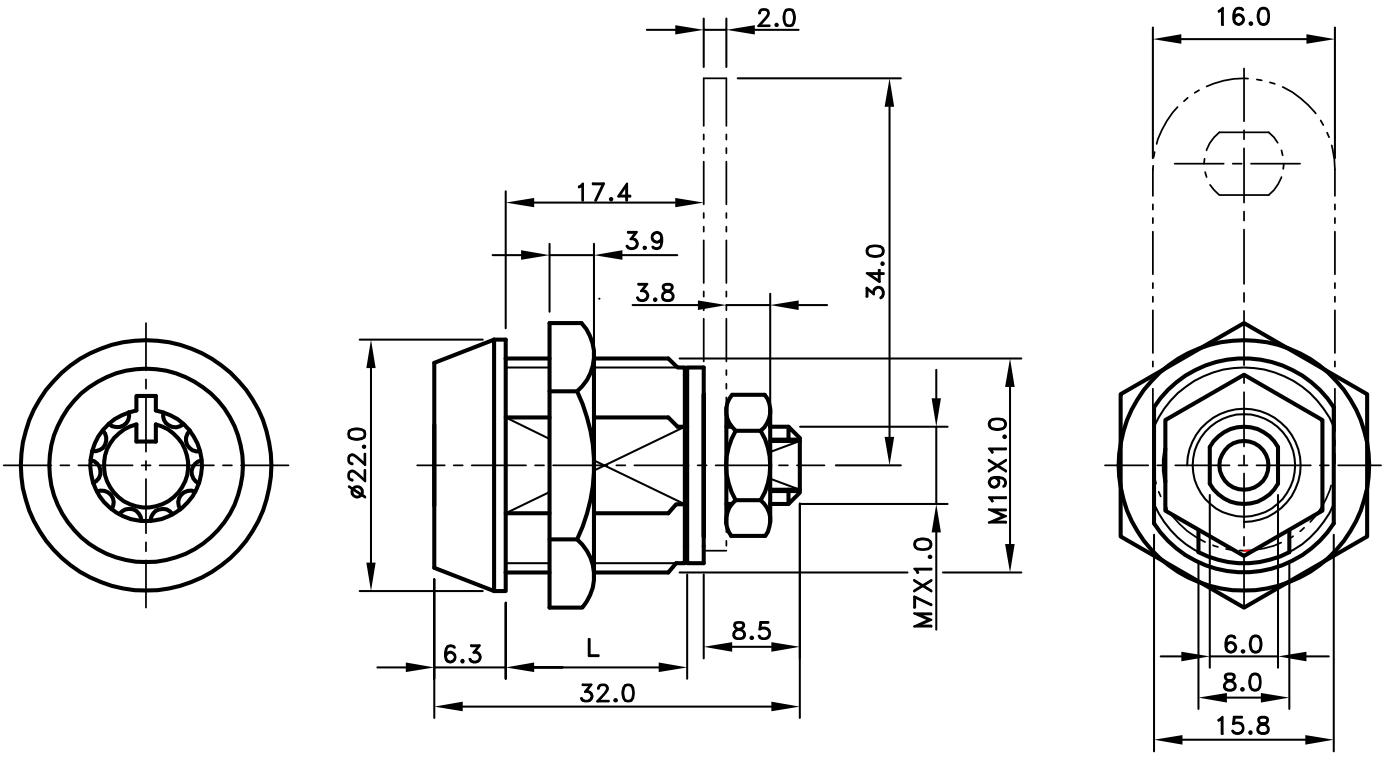

8800 Series 10 Pins Cam Lock

Models: 8085, 8087, 8089

8085-8889 dimensions (sheet 2)

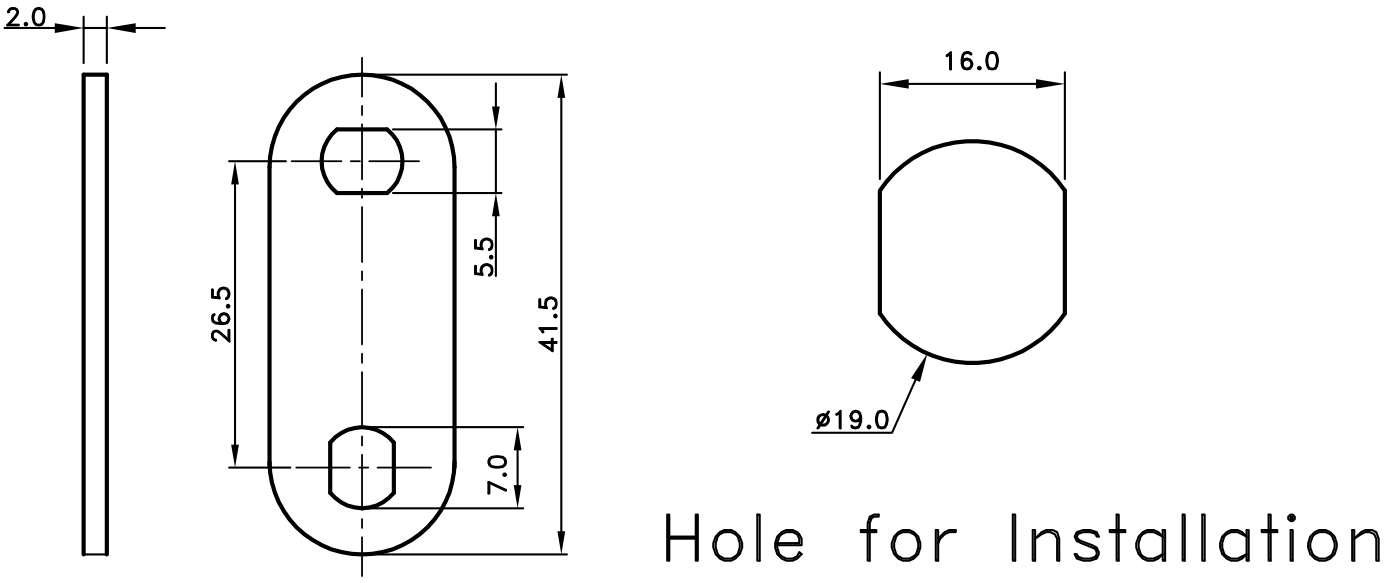

8800 Series 10 Pins Cam Lock

Models: 8085, 8087, 8089

8000 series construction — cross-section view

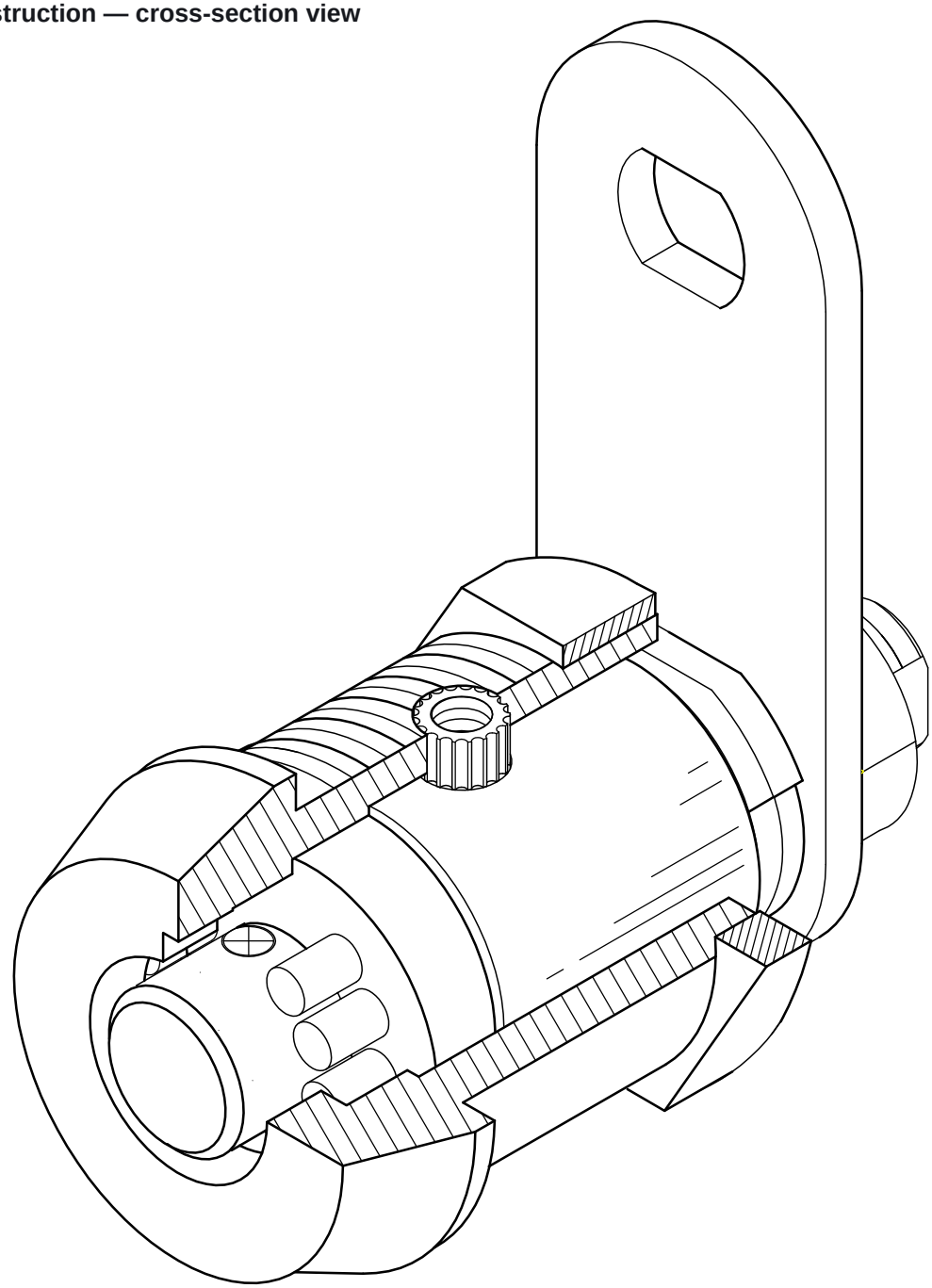

8800 Series 10 Pins Cam Lock

Models: 8085, 8087, 8089

8000 series construction — exploded view

