794-06-L Shackle-Turning Combination Padlock

794-06 dimensions

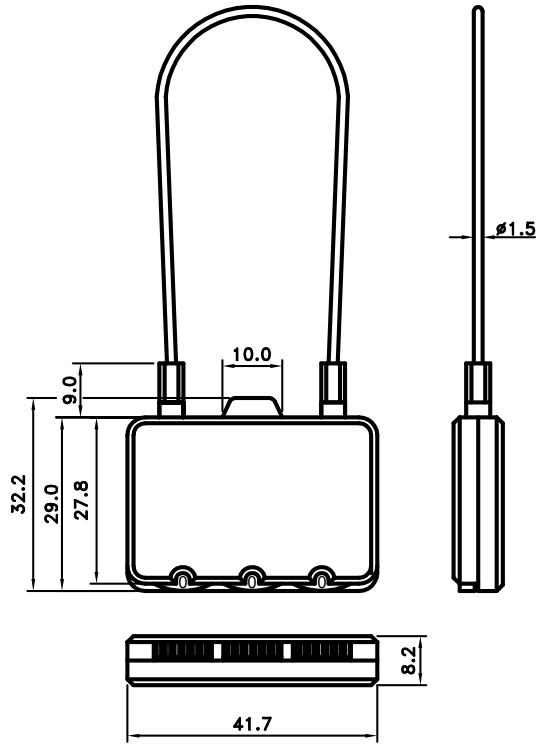

794–06

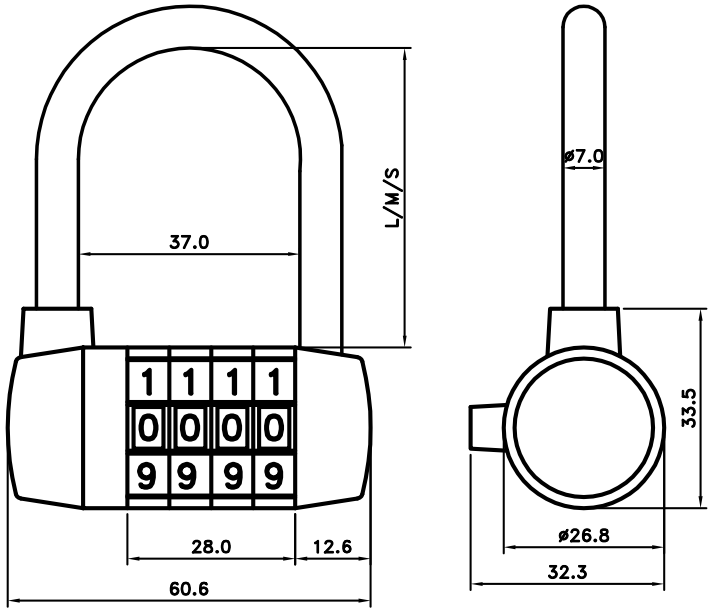

794–06–L–M–S