793 Series Resettable Luggage Padlocks

793-07 dimensions

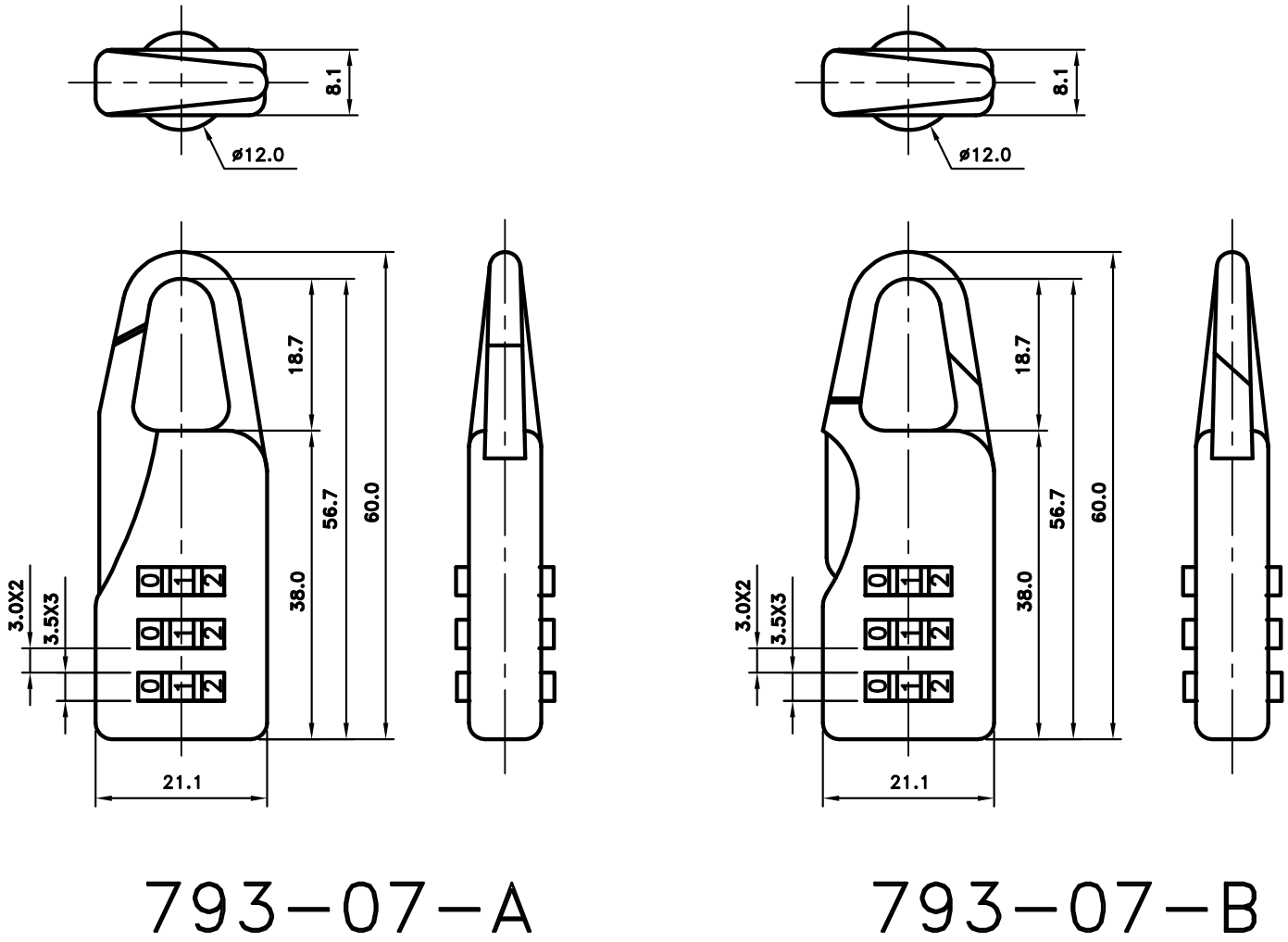

793 Series Resettable Luggage Padlocks

793 09-11 dimensions

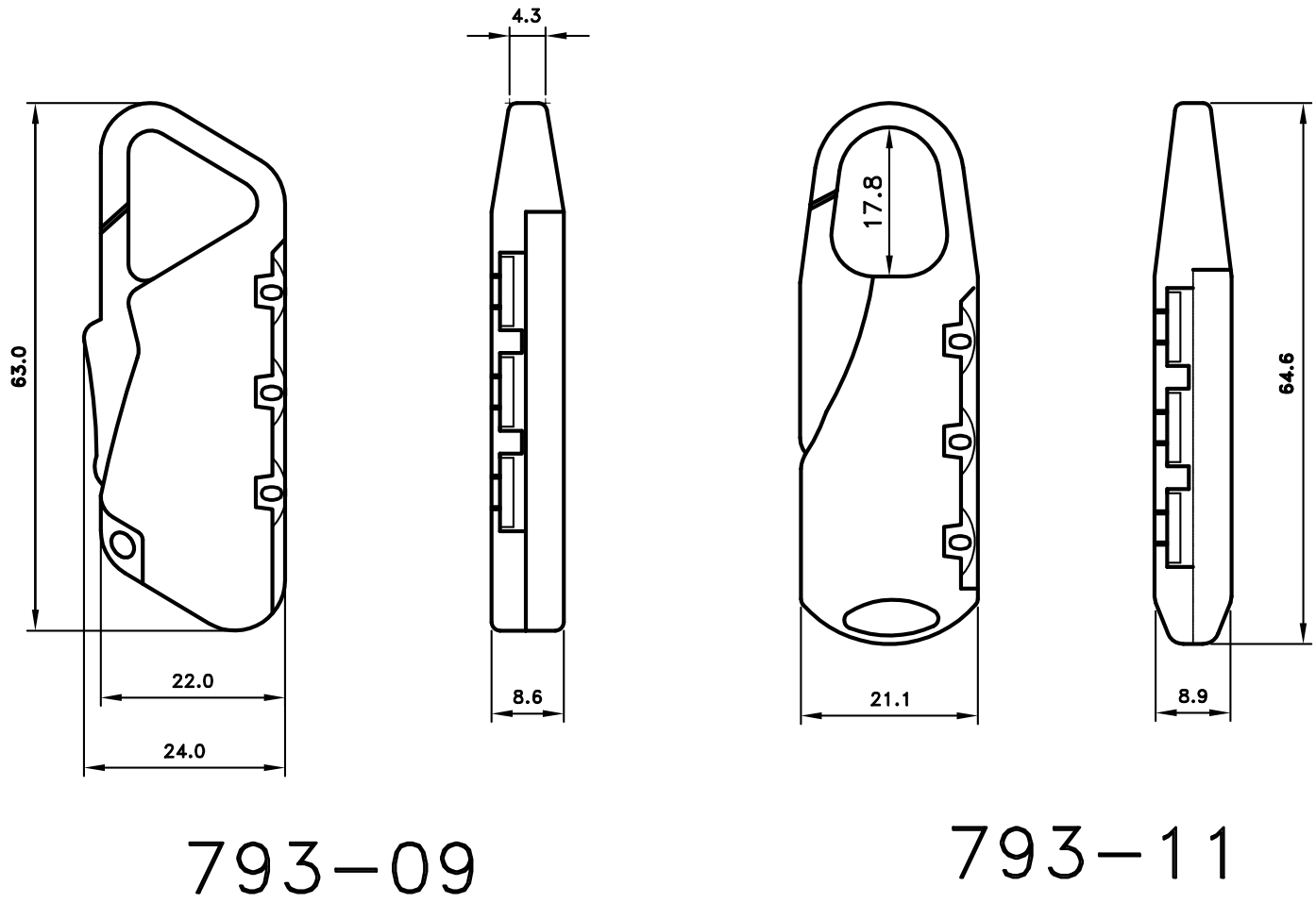

793 Series Resettable Luggage Padlocks

793 03-08 dimensions

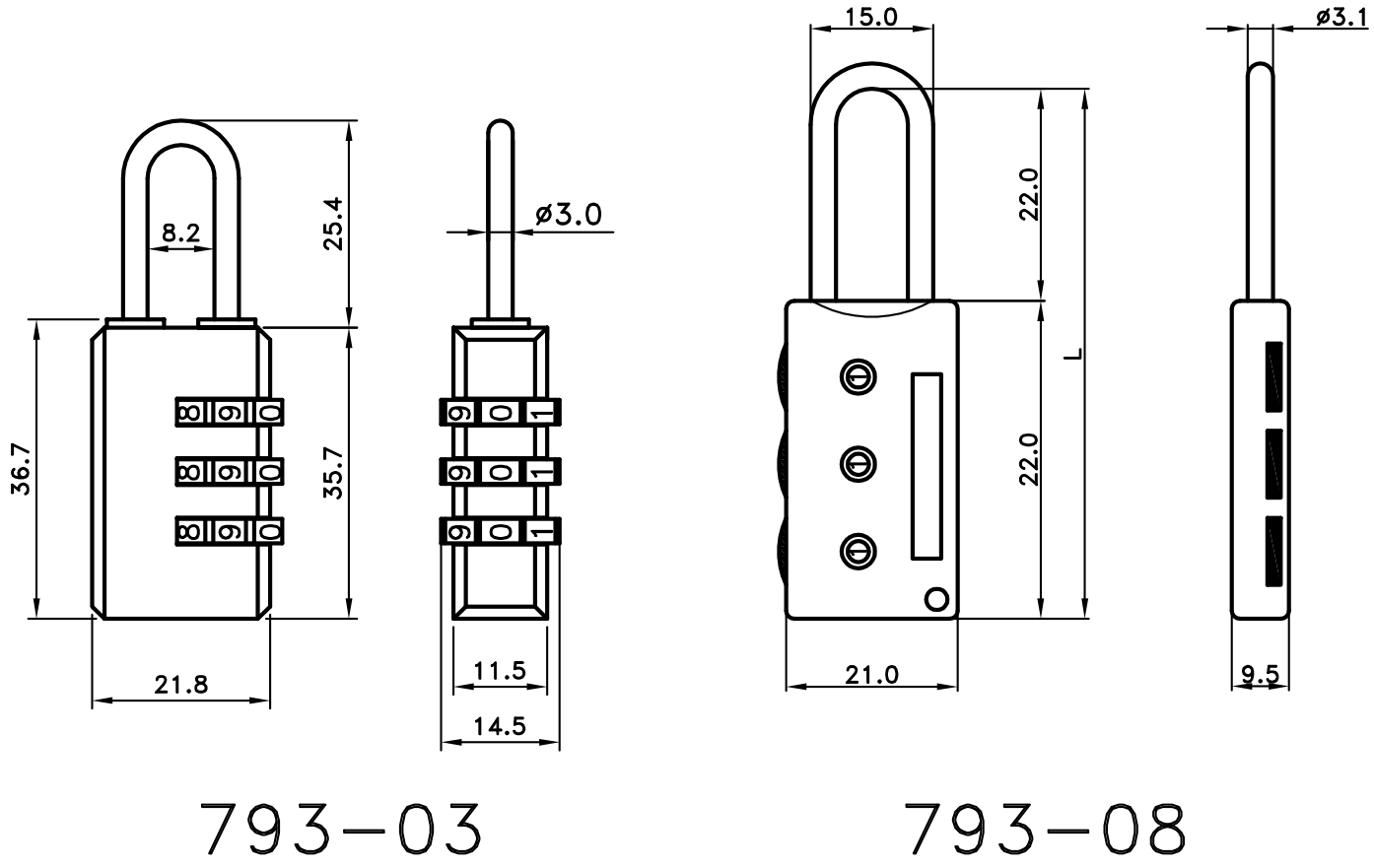

793 Series Resettable Luggage Padlocks

793 10-14 dimensions

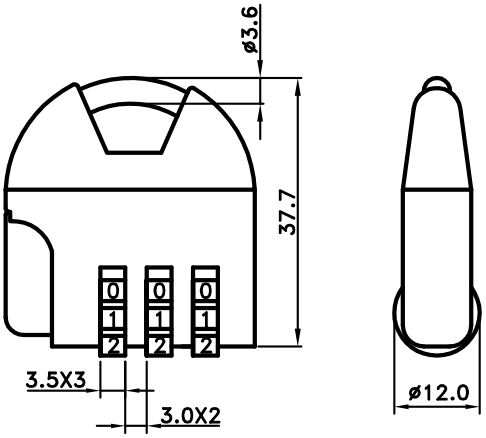

793–10

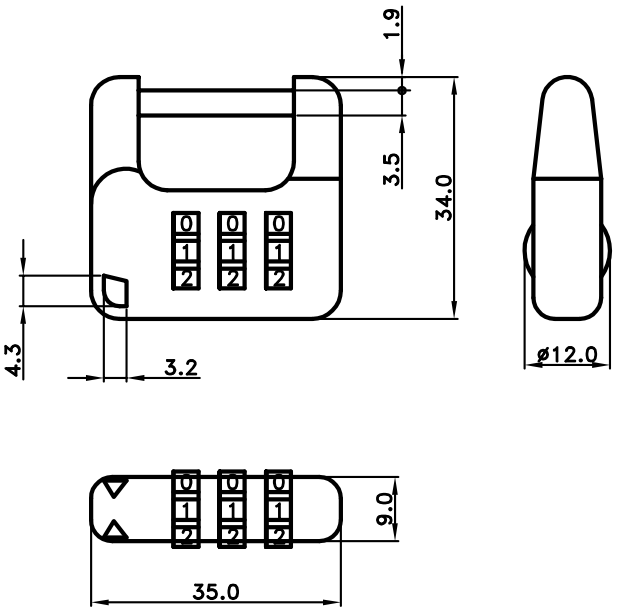

793–14

793 Series Resettable Luggage Padlocks

793 16-20 dimensions

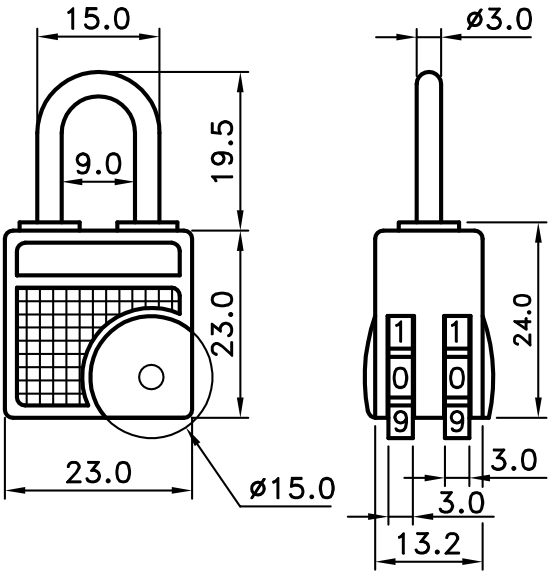

793–16

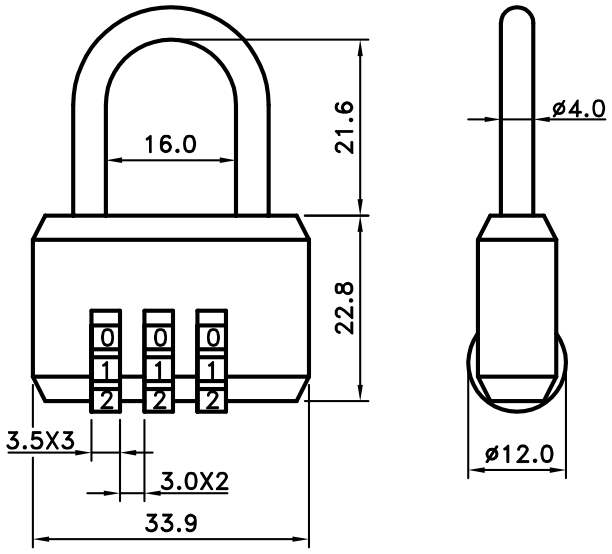

793–20

793 Series Resettable Luggage Padlocks

793-21 dimensions

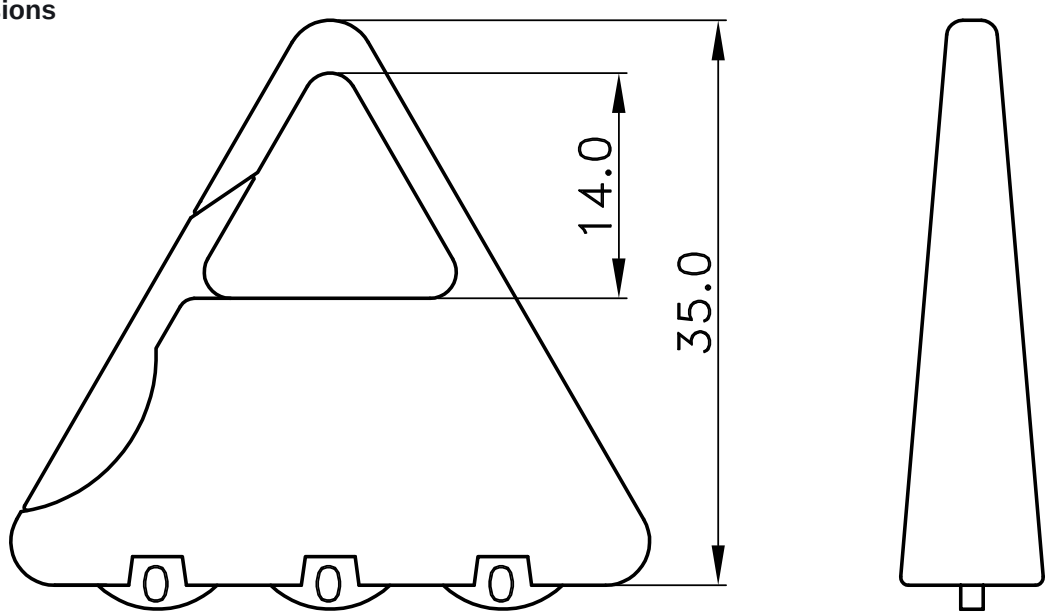

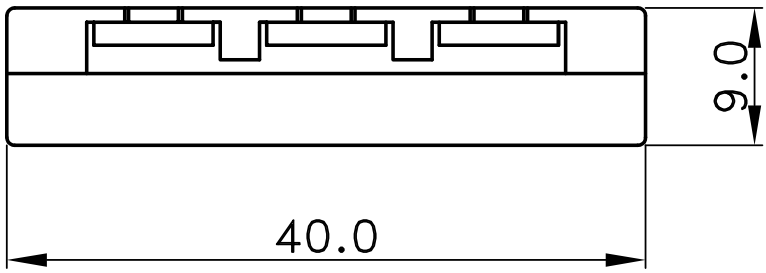

793-21

Dimensions in millimetres (mm). Drawing from the Baton Operator Catalogue (red), page 68. Specifications may change without notice.

793 Series Resettable Luggage Padlocks

793 36-38 dimensions

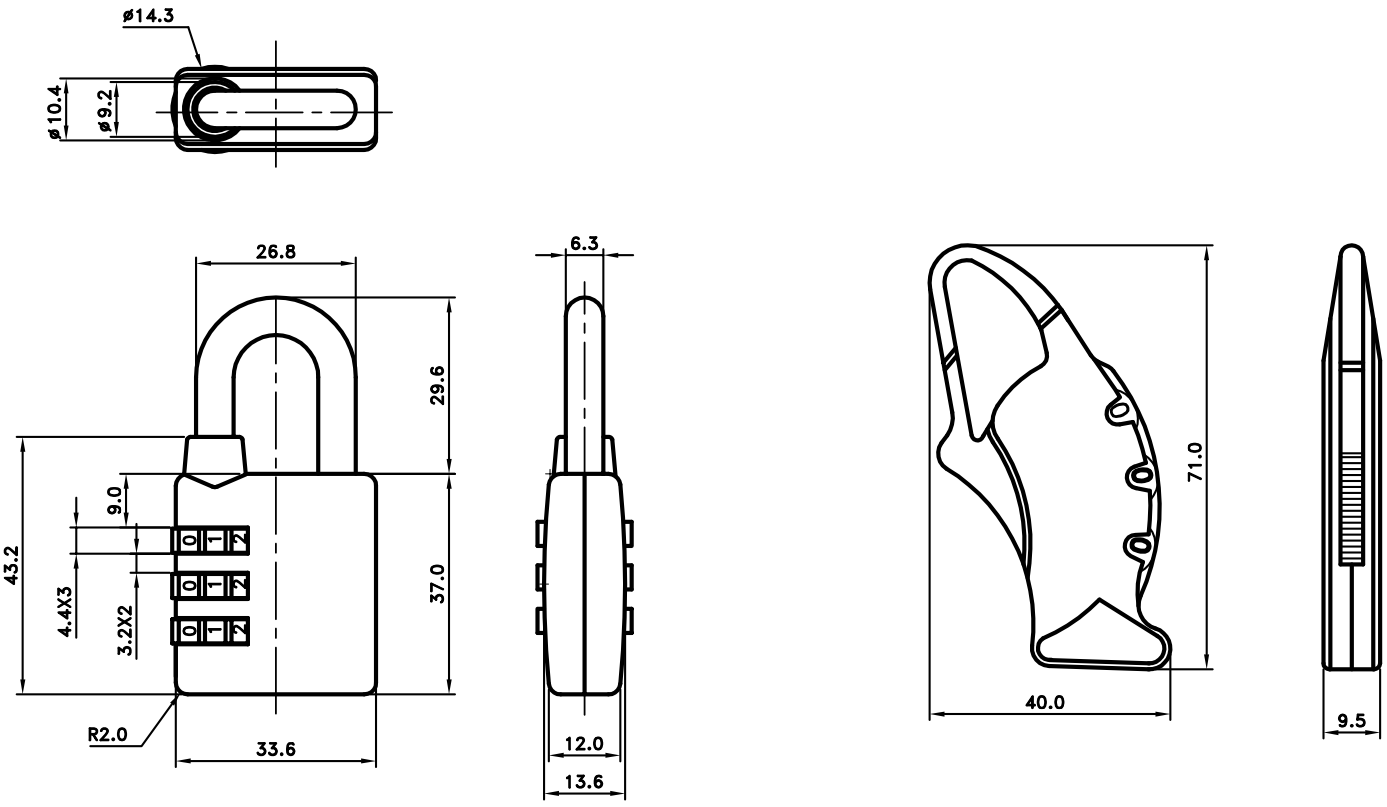

793–36

790–20–3