787 Series Laminated Steel Padlocks

Models: 787-30, 787-40, 787-44, 787-50, 787-64

786-787 S-D dimensions

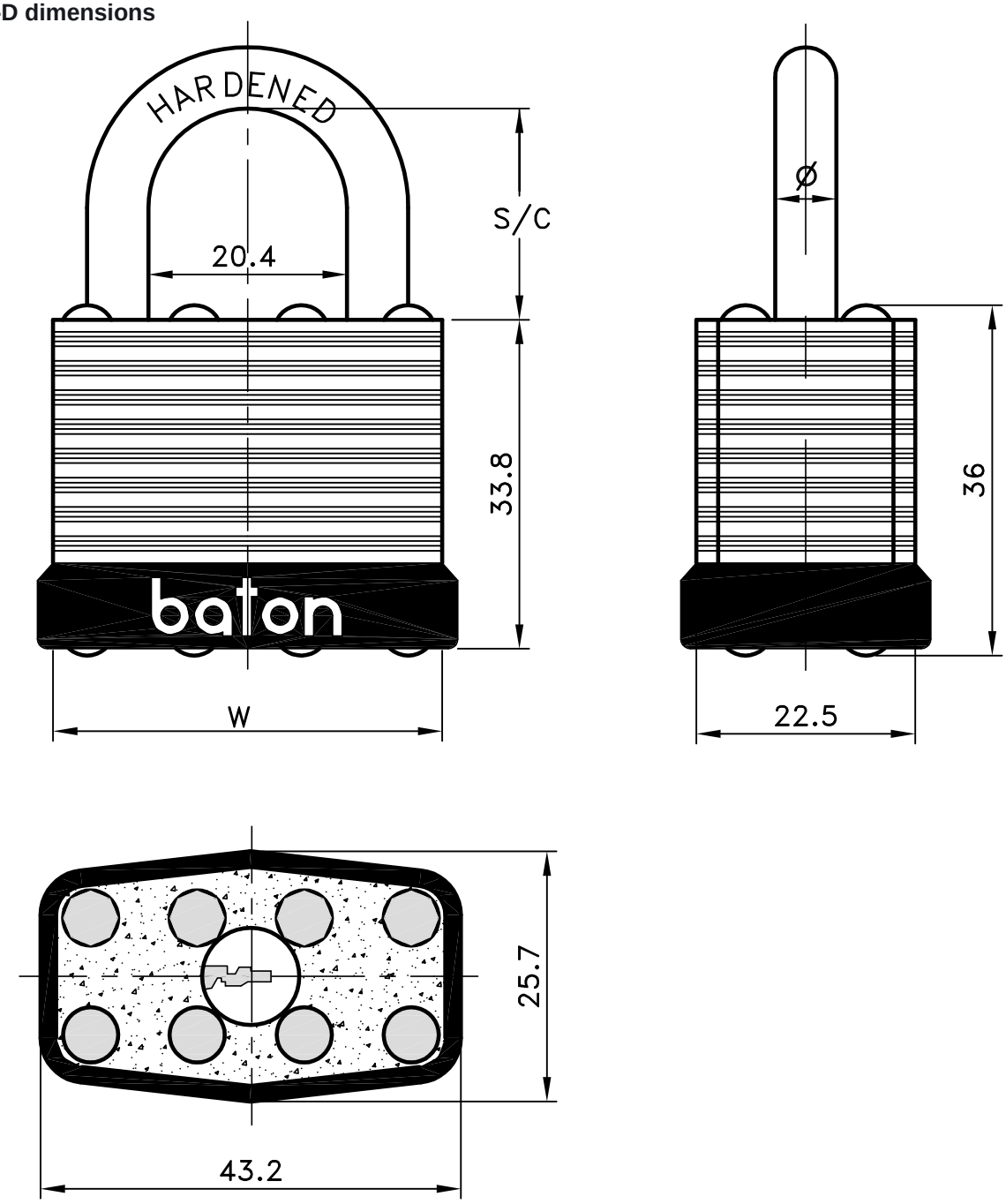

Dimensions in millimetres (mm). Drawing from the Baton Operator Catalogue (red), page 12. Specifications may change without notice.

787 Series Laminated Steel Padlocks

Models: 787-30, 787-40, 787-44, 787-50, 787-64

780 series construction — cross-section view

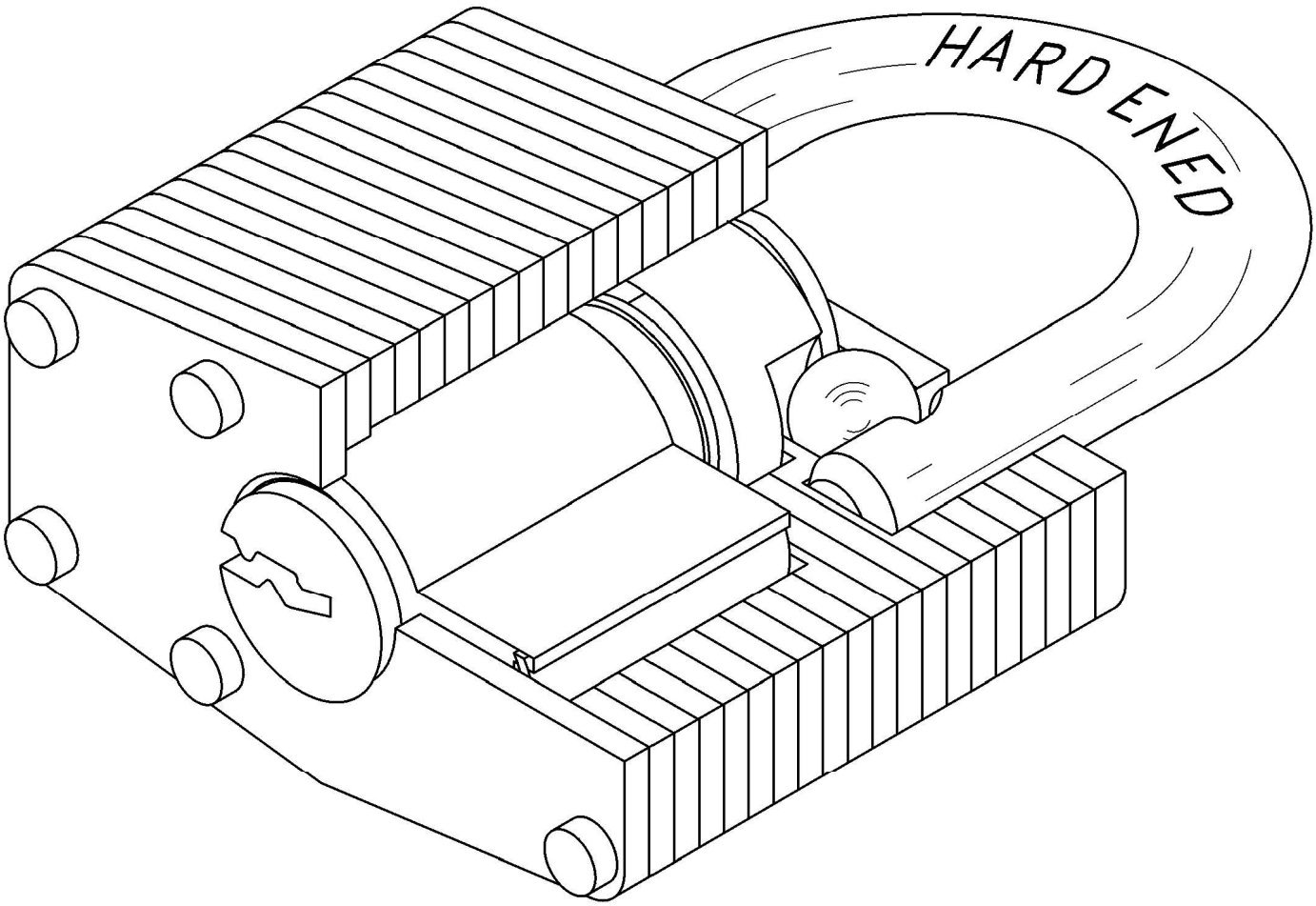

787 Series Laminated Steel Padlocks

Models: 787-30, 787-40, 787-44, 787-50, 787-64

780 series construction — exploded view

