7760 Series: Tubular Key Brass Padlocks

Models: 7760AN45, 7760AN55, 7760AN16

7760 dimensions

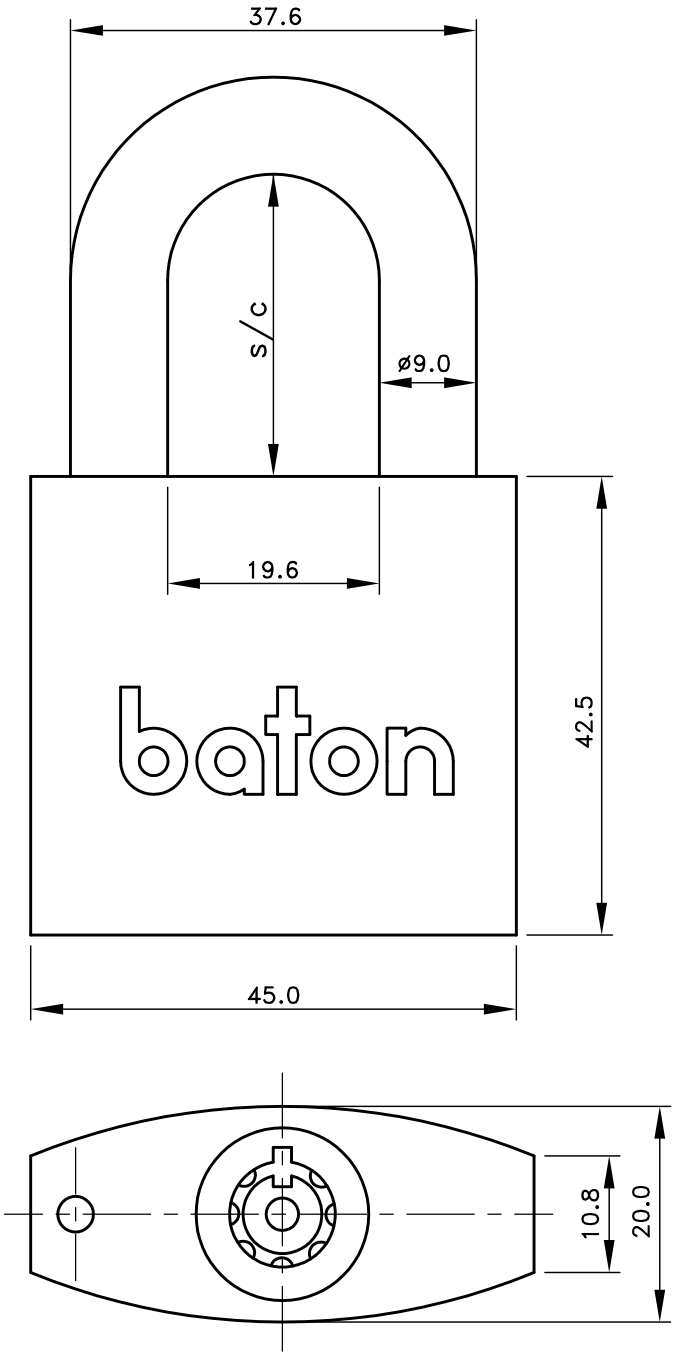

Dimensions in millimetres (mm). Drawing from the Baton Operator Catalogue (red), page 51. Specifications may change without notice.

7760 Series: Tubular Key Brass Padlocks

Models: 7760AN45, 7760AN55, 7760AN16

7760 series construction — cross-section view

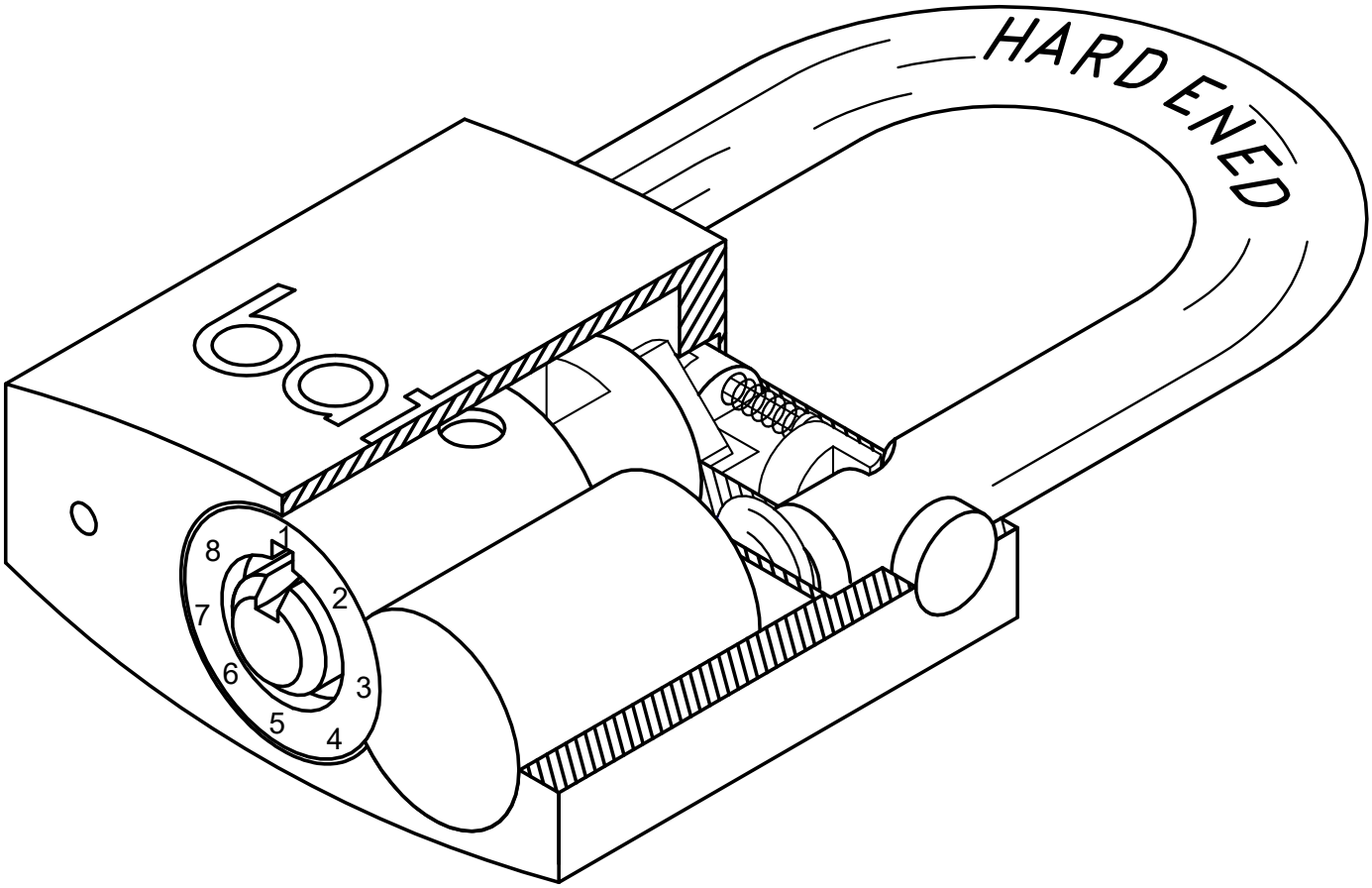

7760 Series: Tubular Key Brass Padlocks

Models: 7760AN45, 7760AN55, 7760AN16

7760 series construction — exploded view

