764S

Models: FB764S20DBV1USBB, FB764S25DBV2USBB, FB764S30DBV3USBB, FB764S35DBV3USBB, FB764S40DBV3USBB, FB764S45DBV4USBB, FB764S50DBV4USBB, FB764S60DBV4USBB, FB764L40DBV3USBB, FB764L50DBV4USBB, FB764L60DBV4USBB

764B-S-SL dimensions

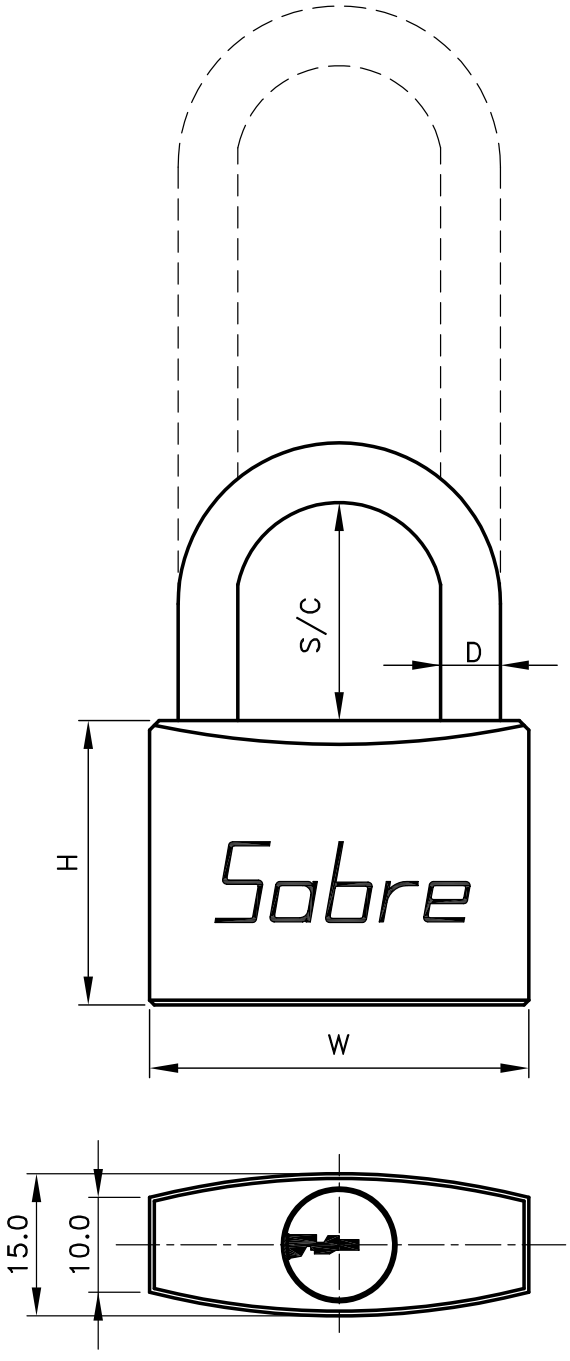

Dimensions in millimetres (mm). Drawing from the Baton Operator Catalogue (red), page 03. Specifications may change without notice.

764S

Models: FB764S20DBV1USBB, FB764S25DBV2USBB, FB764S30DBV3USBB, FB764S35DBV3USBB, FB764S40DBV3USBB, FB764S45DBV4USBB, FB764S50DBV4USBB, FB764S60DBV4USBB, FB764L40DBV3USBB, FB764L50DBV4USBB, FB764L60DBV4USBB

700 series construction — cross-section view

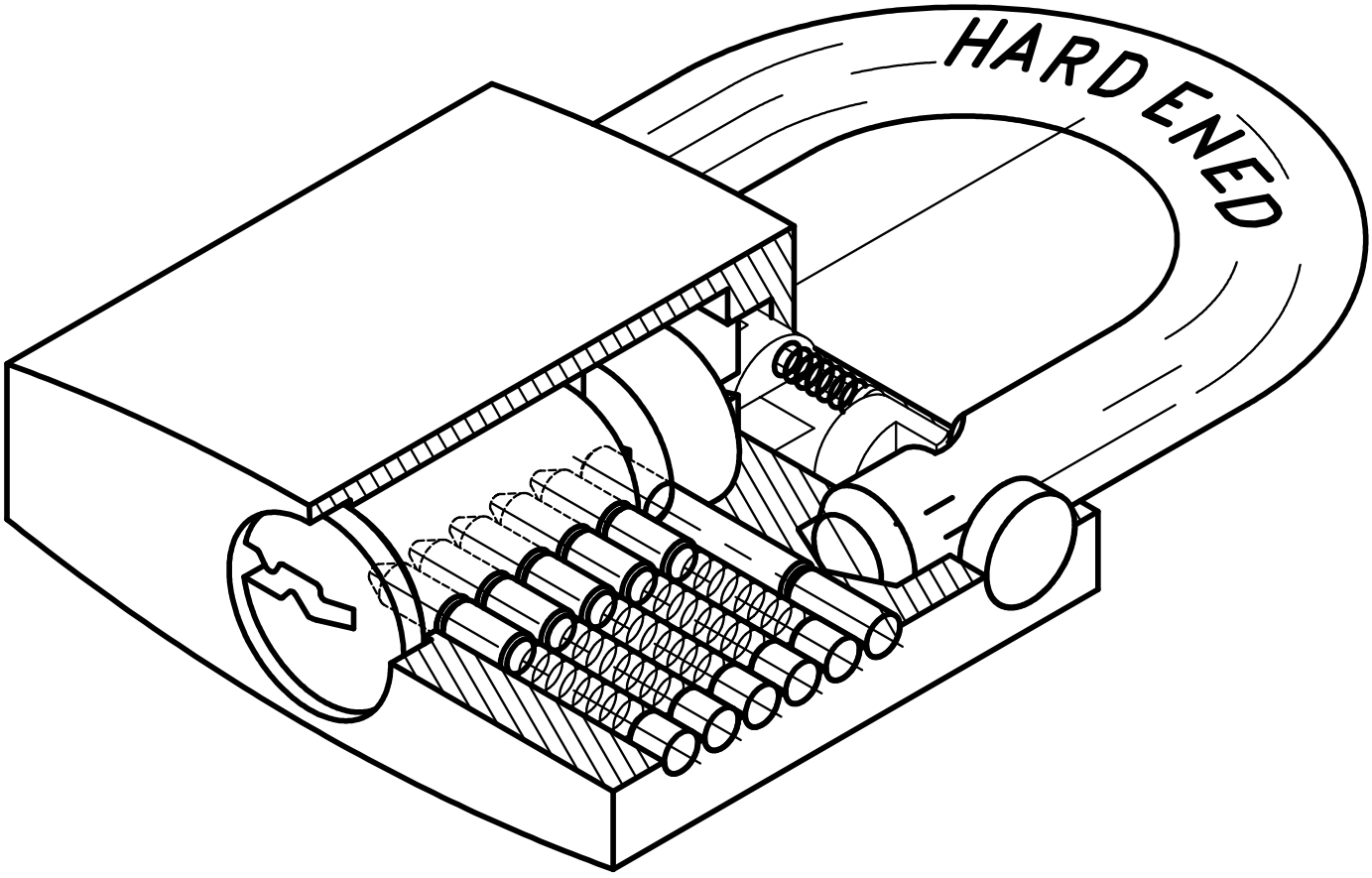

Dimensions in millimetres (mm). Drawing from the Baton Operator Catalogue (red), page 01. Specifications may change without notice.

764S

Models: FB764S20DBV1USBB, FB764S25DBV2USBB, FB764S30DBV3USBB, FB764S35DBV3USBB, FB764S40DBV3USBB, FB764S45DBV4USBB, FB764S50DBV4USBB, FB764S60DBV4USBB, FB764L40DBV3USBB, FB764L50DBV4USBB, FB764L60DBV4USBB

700 series construction — exploded view

