740 / 746 / 747 Economy Cam Locks

740N-S dimensions (sheet 1)

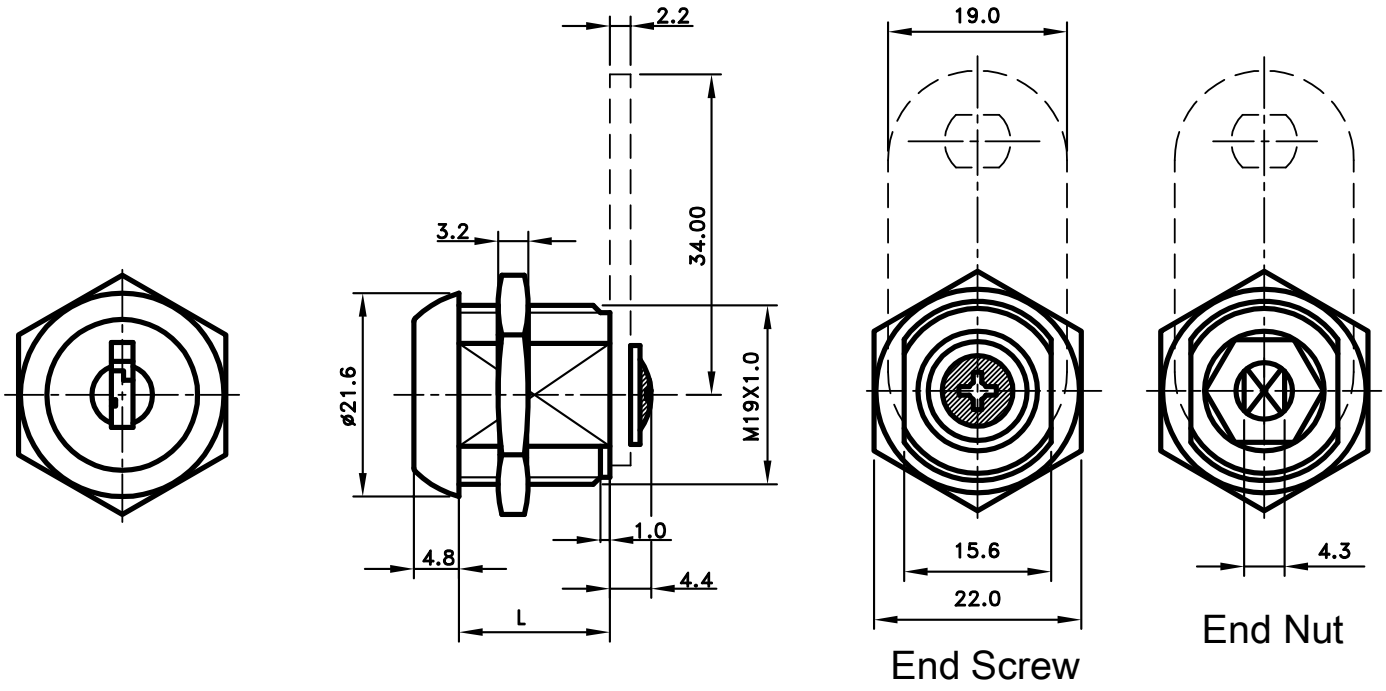

740 / 746 / 747 Economy Cam Locks

740N-S dimensions (sheet 2)

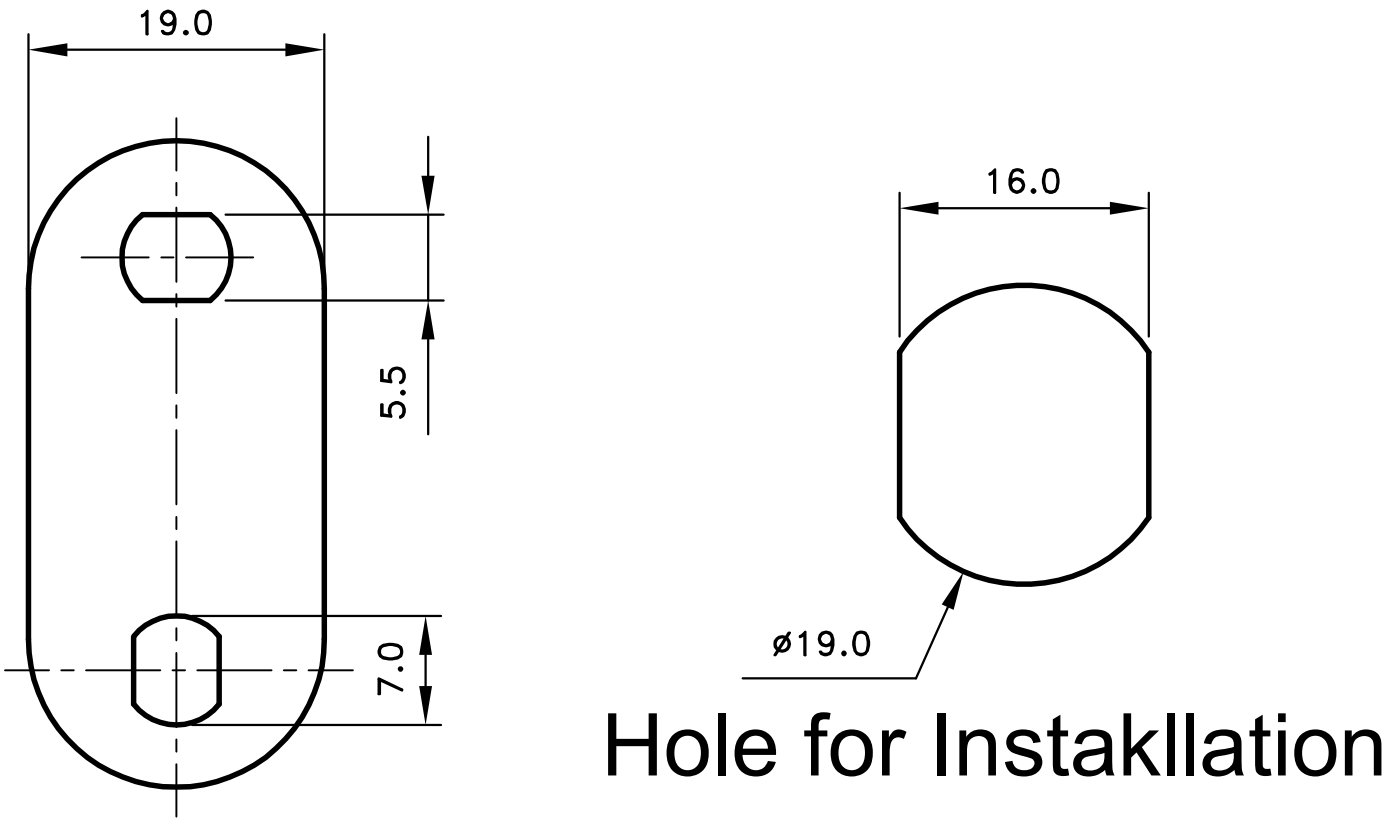

740 / 746 / 747 Economy Cam Locks

747NB-SB dimensions (sheet 1)

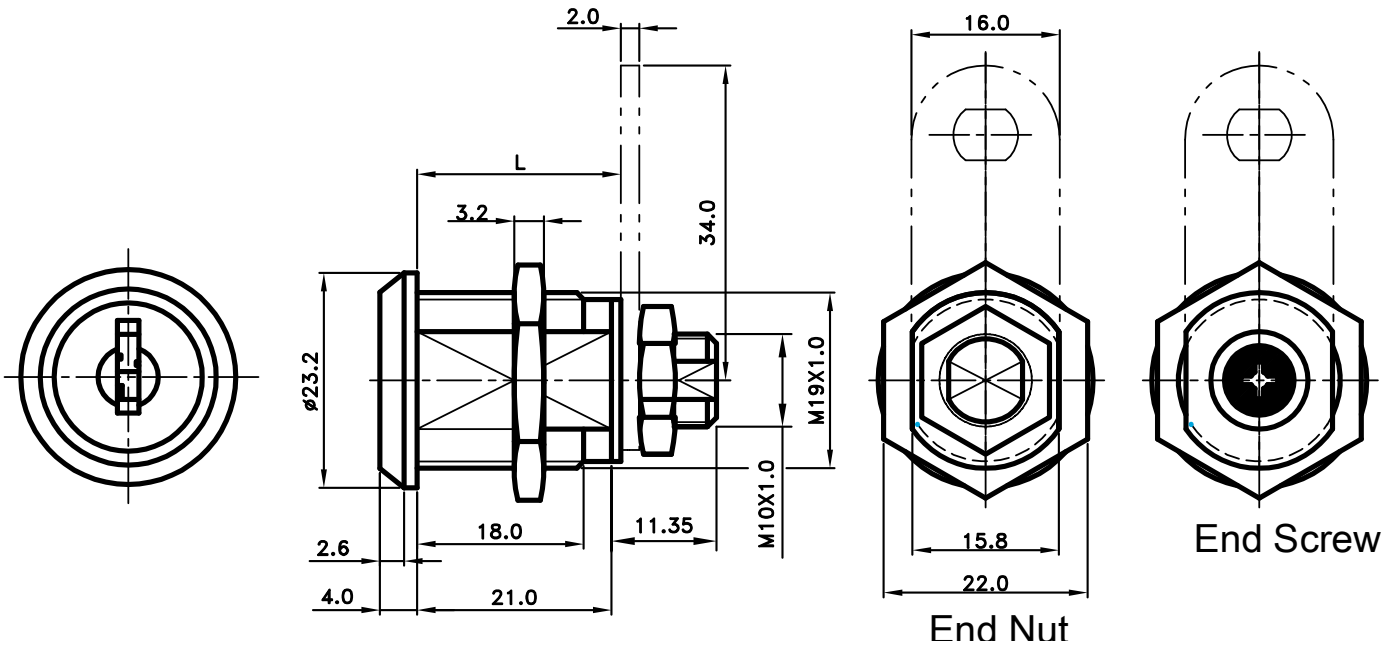

740 / 746 / 747 Economy Cam Locks

747NB-SB dimensions (sheet 2)

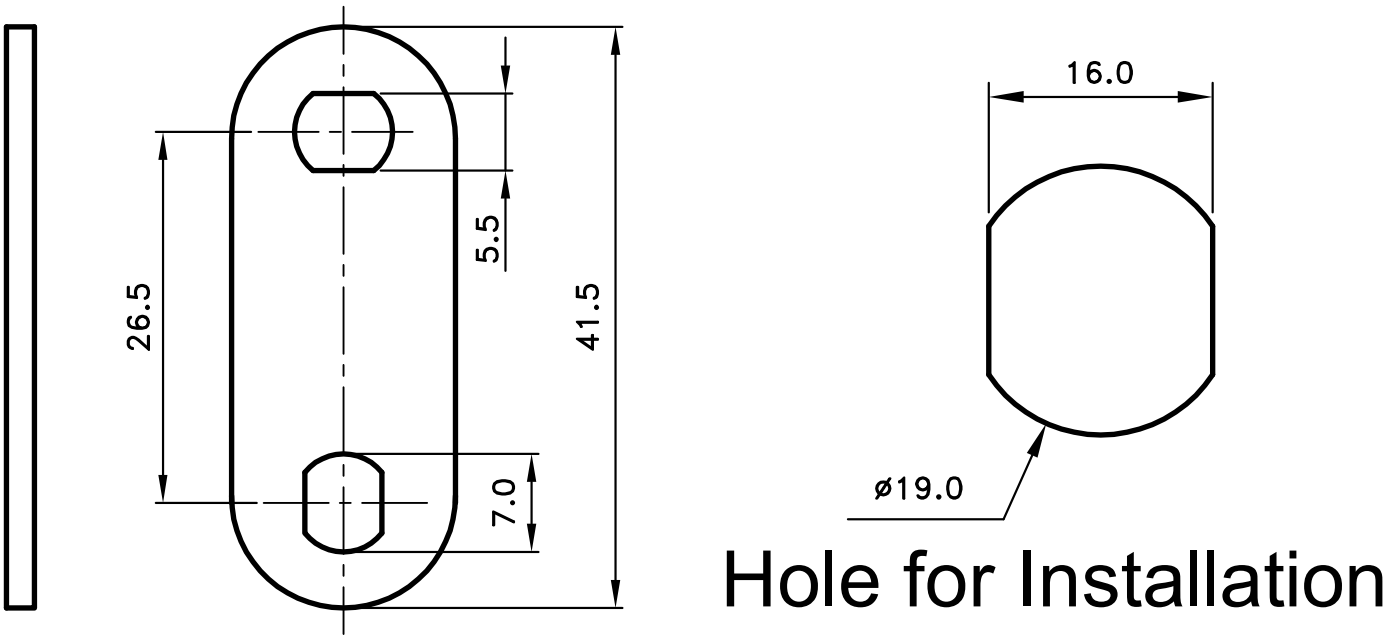

740 / 746 / 747 Economy Cam Locks

740N series construction — cross-section view

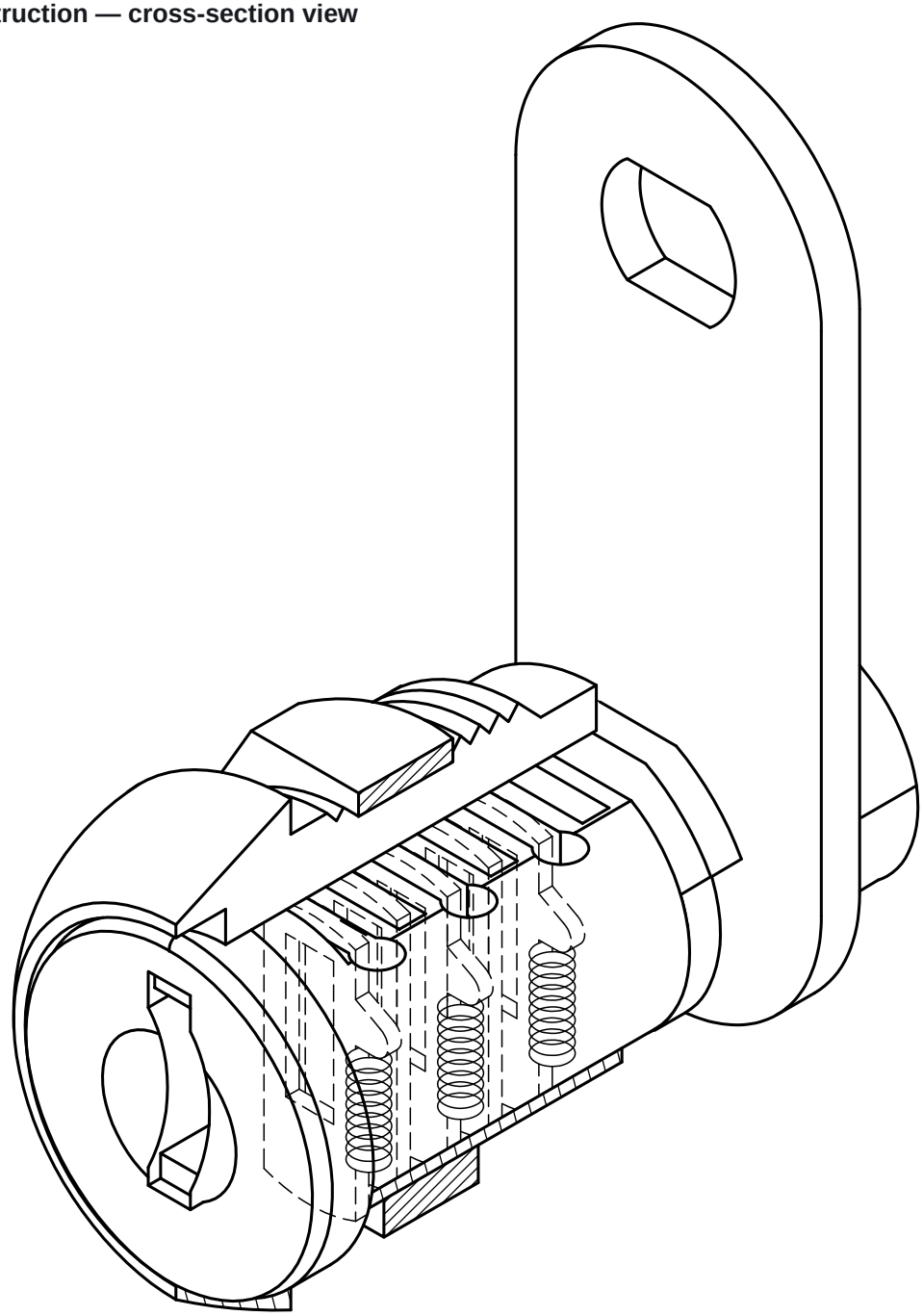

Dimensions in millimetres (mm). Drawing from the Baton Operator Catalogue (red), page 15. Specifications may change without notice.

740 / 746 / 747 Economy Cam Locks

740N series construction — exploded view

