720

Models: 720RSB15DBW3A00P, 722RSC23DB03A00P

720A dimensions

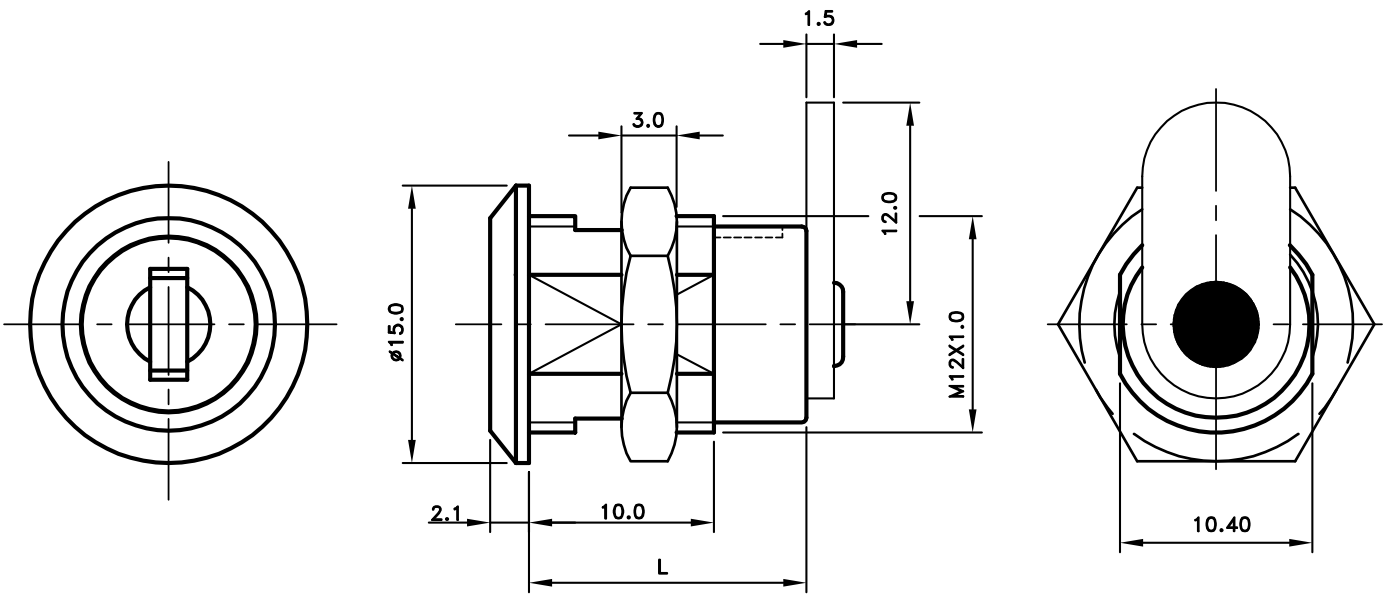

Dimensions in millimetres (mm). Drawing from the Baton Operator Catalogue (red), page 27. Specifications may change without notice.

720

Models: 720RSB15DBW3A00P, 722RSC23DB03A00P

722B/723B dimensions

