709

Models: 709RLB23DB03A0BP

709-10 dimensions

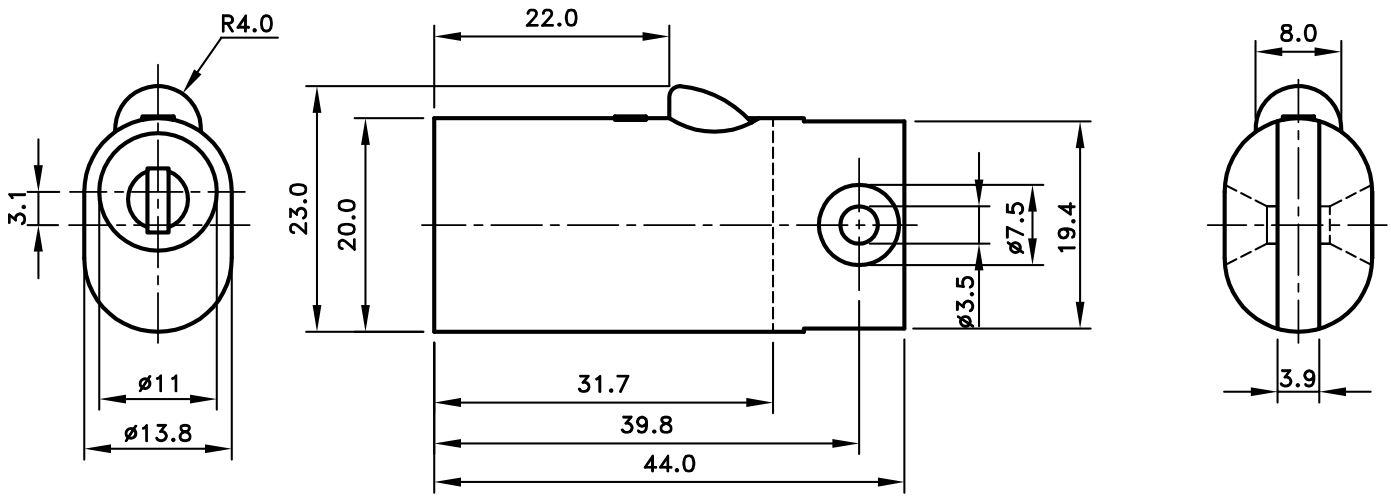

709

Models: 709RLB23DB03A0BP

709-20 dimensions

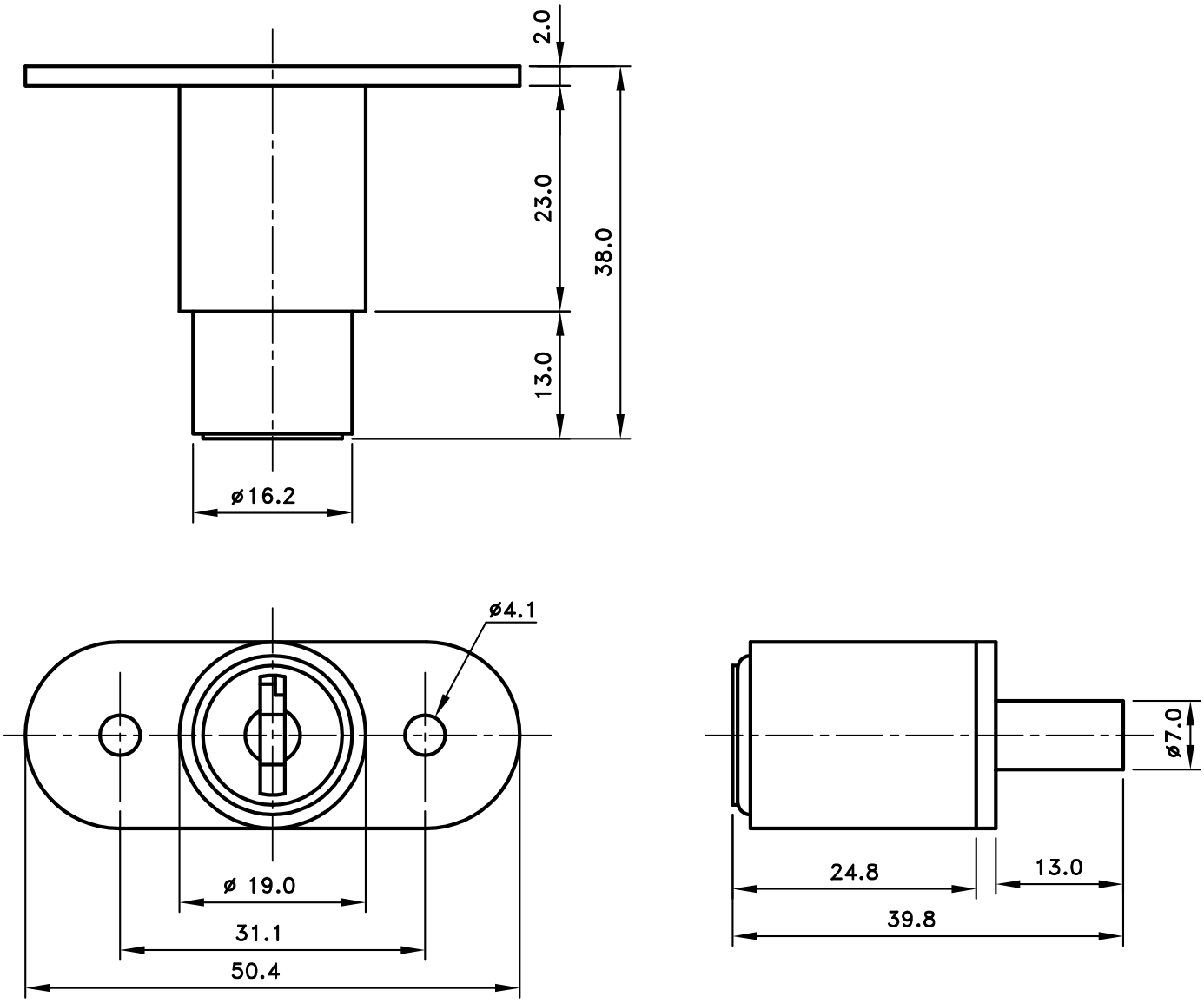

709

Models: 709RLB23DB03A0BP

709-120 dimensions

