688 Series: T-Handles

Models: 688-T31, 688-T231-B, 688-T64, 688-S115, 688-S170, 688-P, 688-SG

688-T31 dimensions

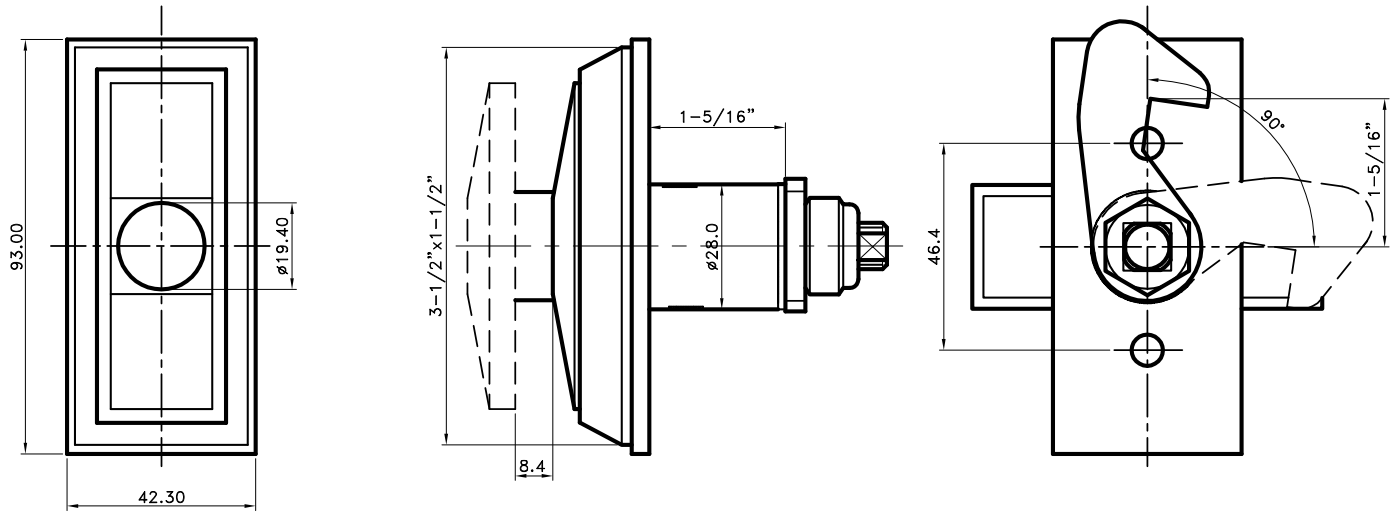

688 Series: T-Handles

Models: 688-T31, 688-T231-B, 688-T64, 688-S115, 688-S170, 688-P, 688-SG

688 S115-S117 dimensions

