6120

Models: 6120-45, 6120-45-A2

6120-45 dimensions

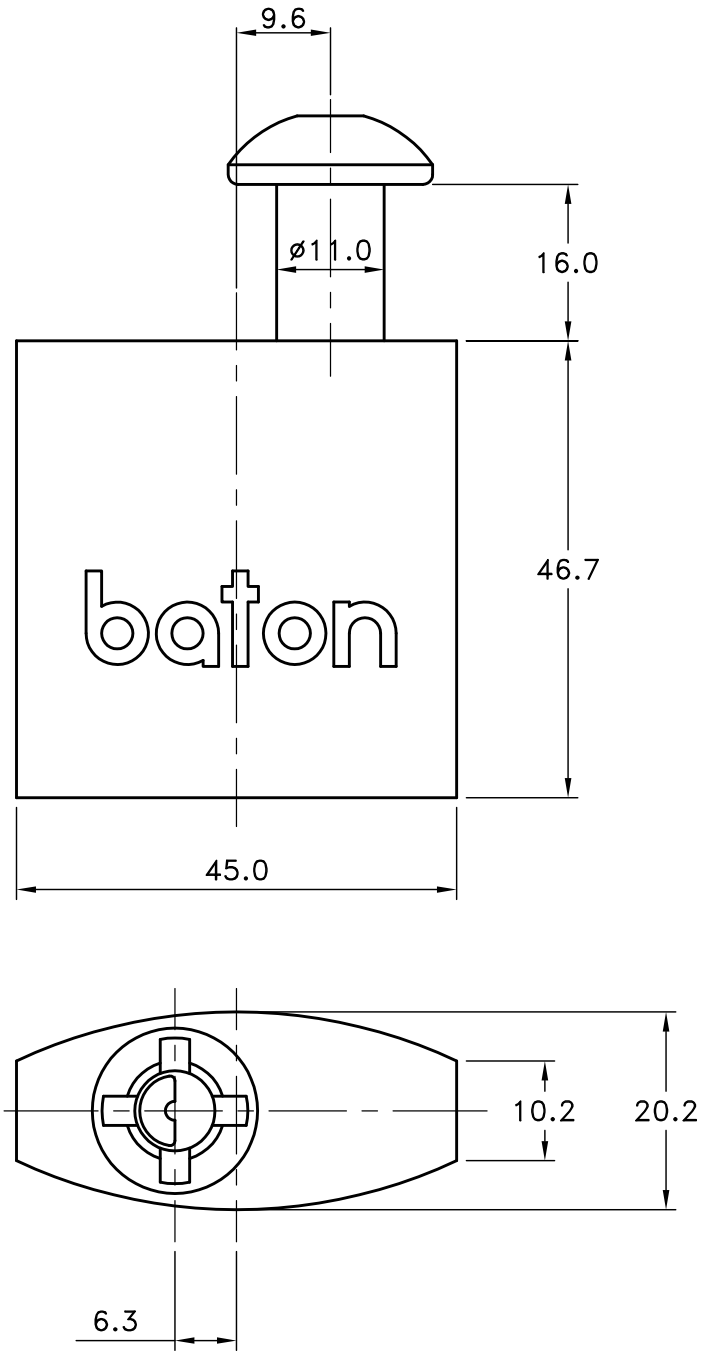

Dimensions in millimetres (mm). Drawing from the Baton Operator Catalogue (red), page 37. Specifications may change without notice.

6120

Models: 6120-45, 6120-45-A2

6000 series construction — cross-section view

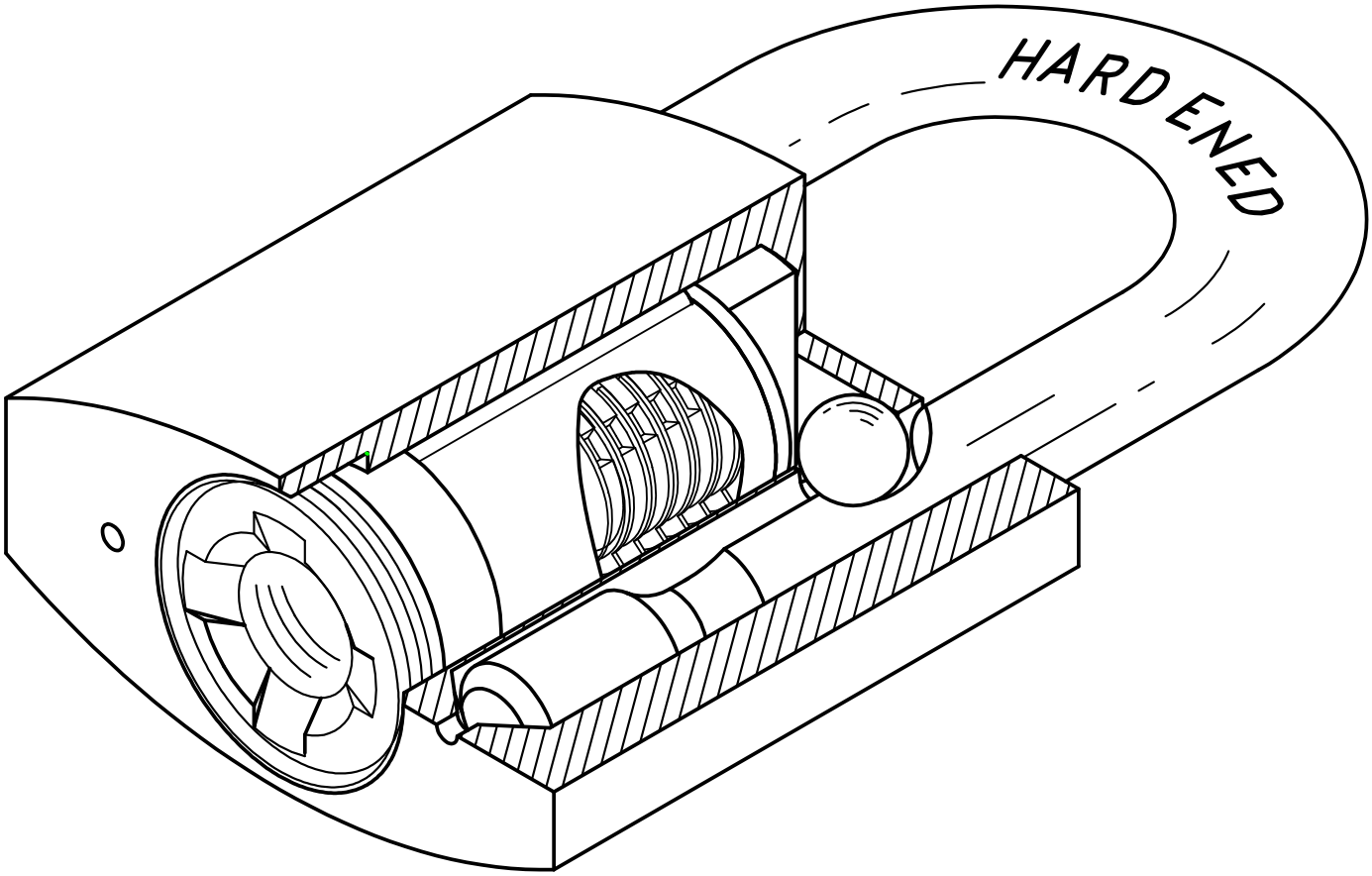

6120

Models: 6120-45, 6120-45-A2

6000 series construction — exploded view

