5644 PLUG LOCK

Models: 5644-10, 5644-1D

5644 dimensions

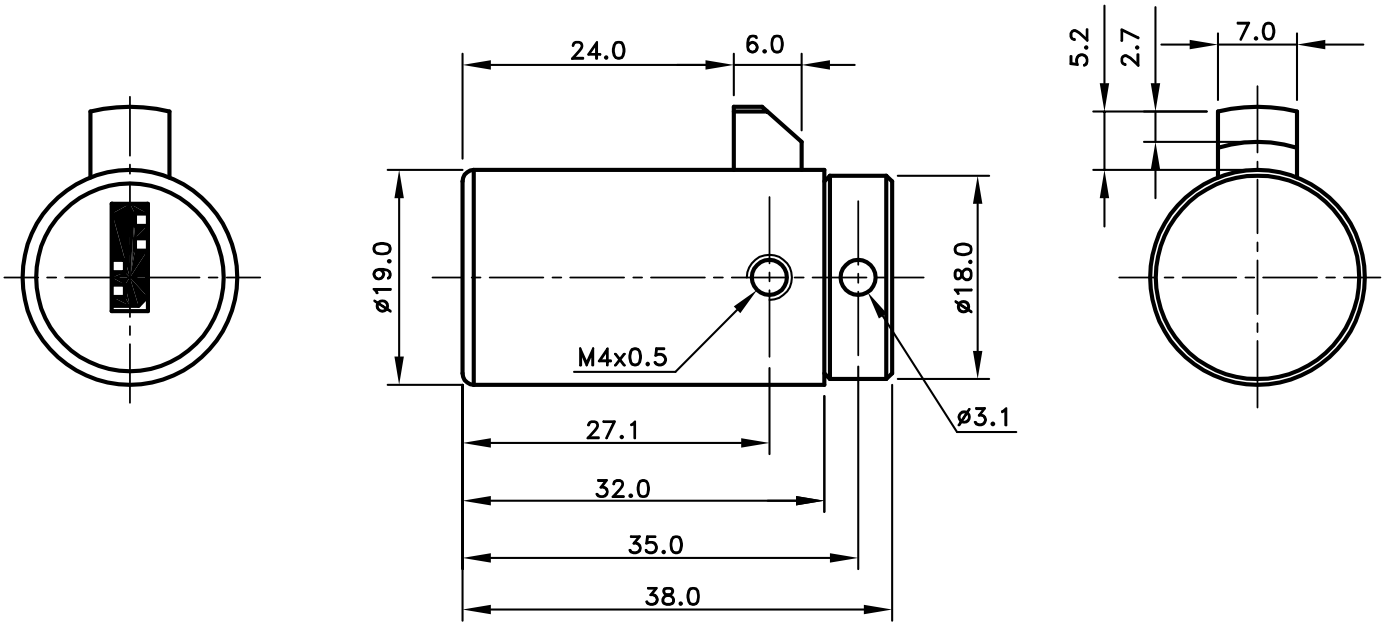

Dimensions in millimetres (mm). Drawing from the Baton Operator Catalogue (red), page 31. Specifications may change without notice.

5644 PLUG LOCK

Models: 5644-10, 5644-1D

5000 series construction — cross-section view

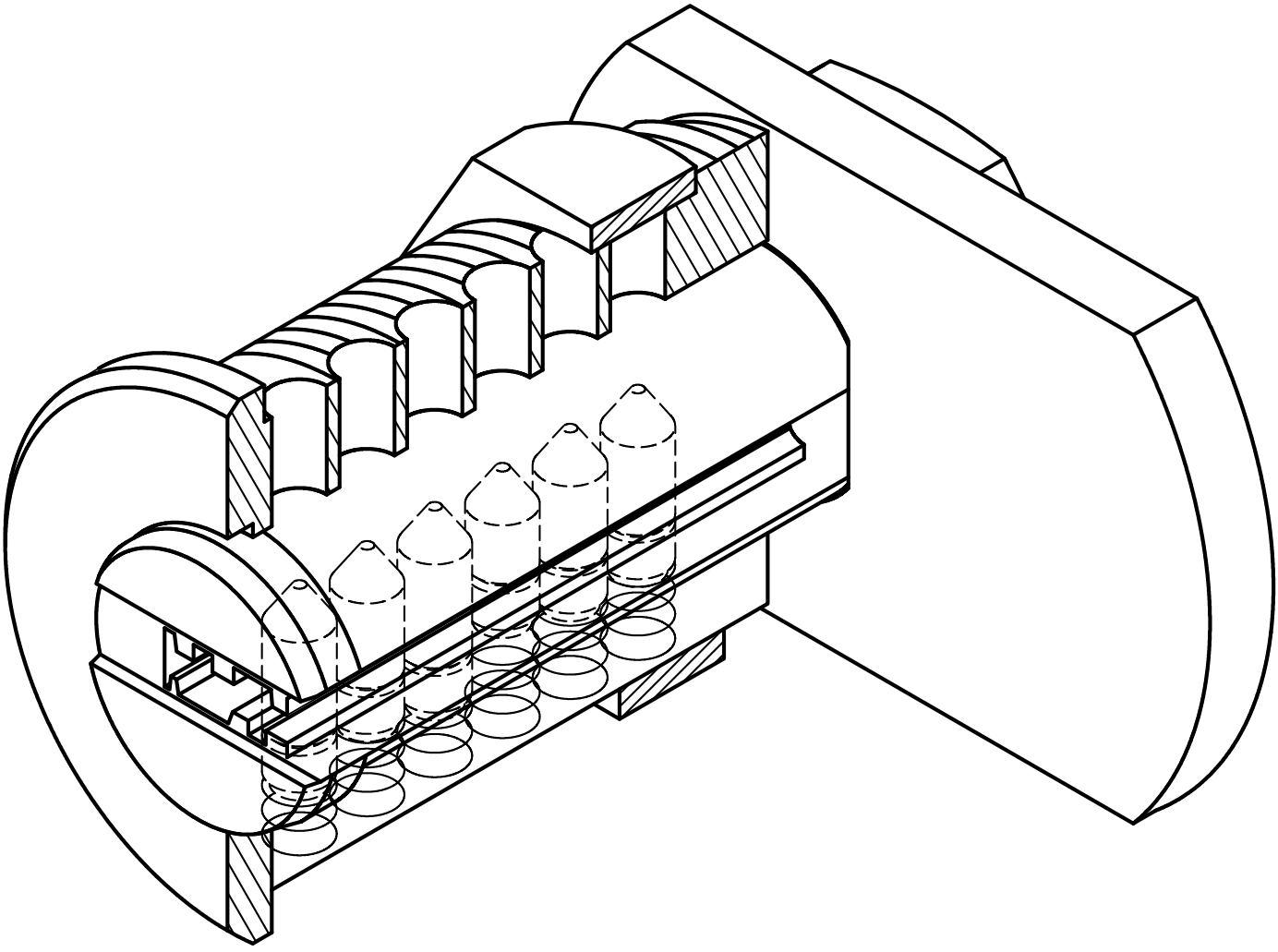

5644 PLUG LOCK

Models: 5644-10, 5644-1D

5000 series construction — exploded view

