5044

Models: 5044-10, 5044-1D

5044 dimensions

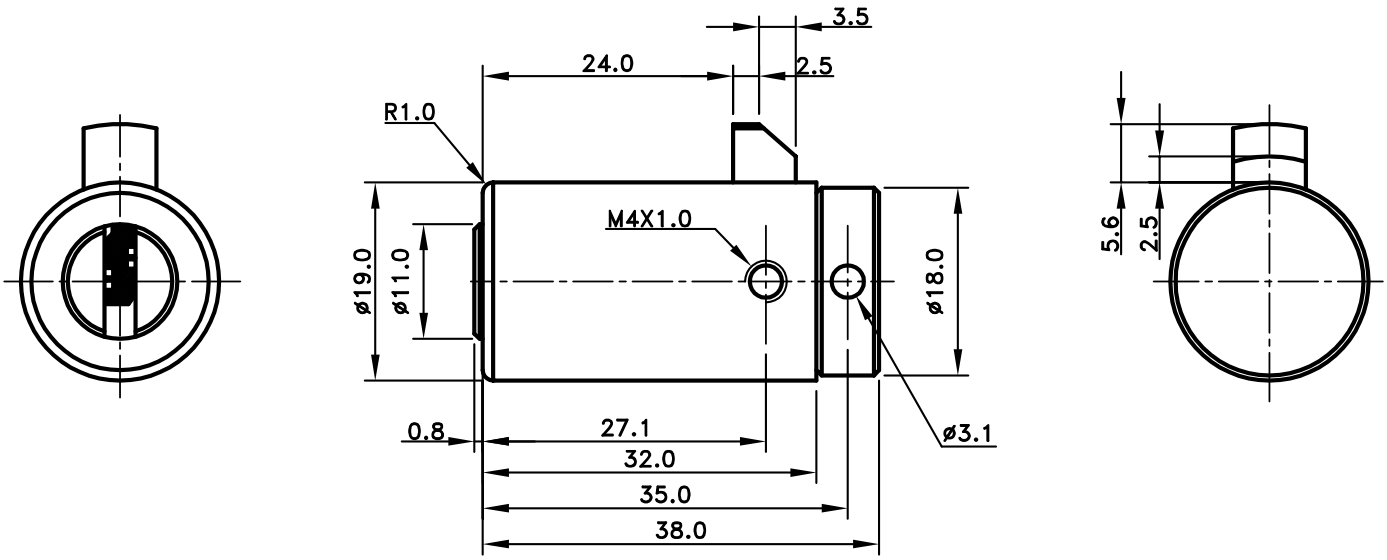

5044

Models: 5044-10, 5044-1D

5000 series construction — cross-section view

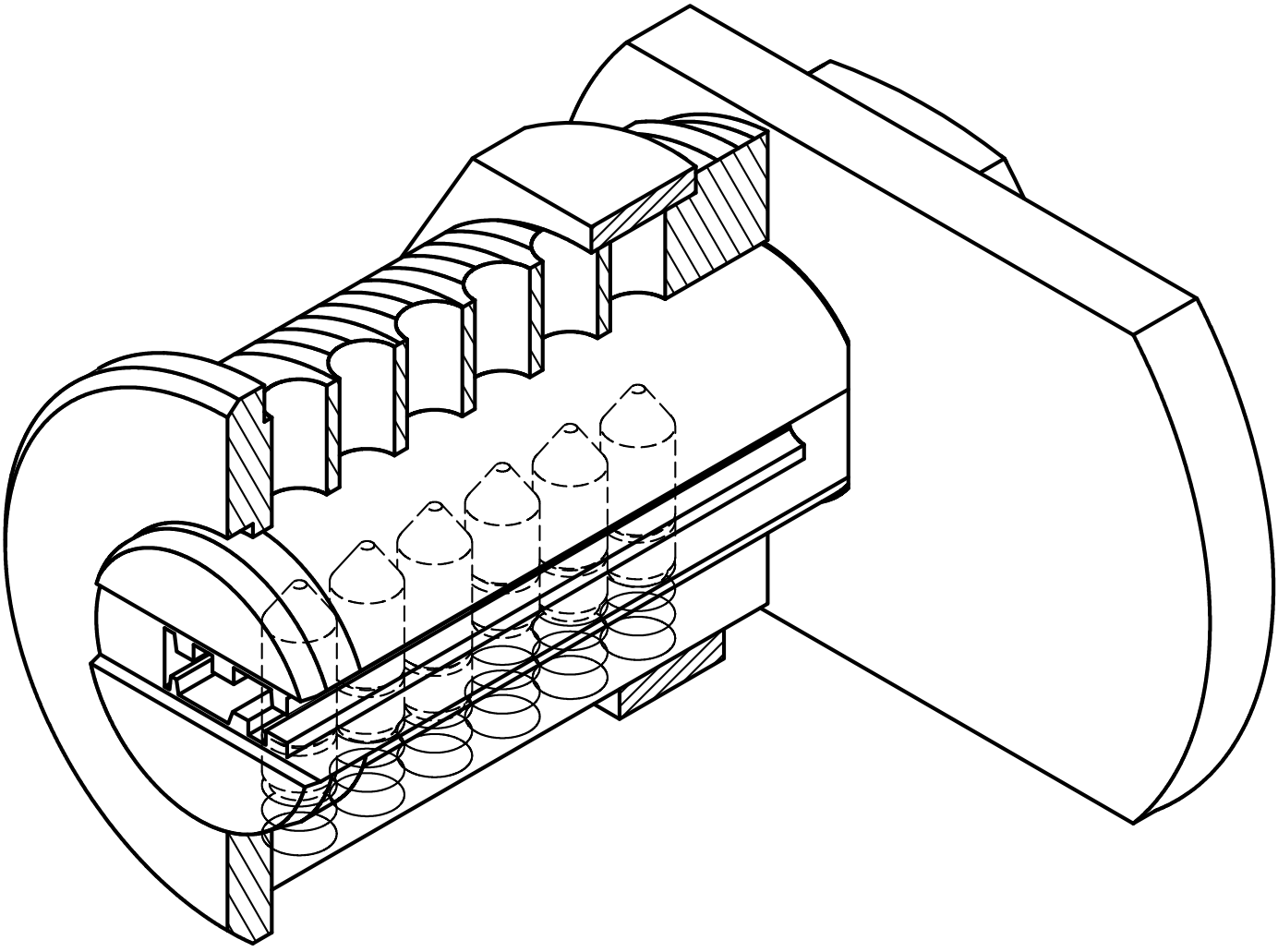

Dimensions in millimetres (mm). Drawing from the Baton Operator Catalogue (red), page 28. Specifications may change without notice.

5044

Models: 5044-10, 5044-1D

5000 series construction — exploded view

