Installation Template For LT250 LS

Check drawing measurements when reprinting

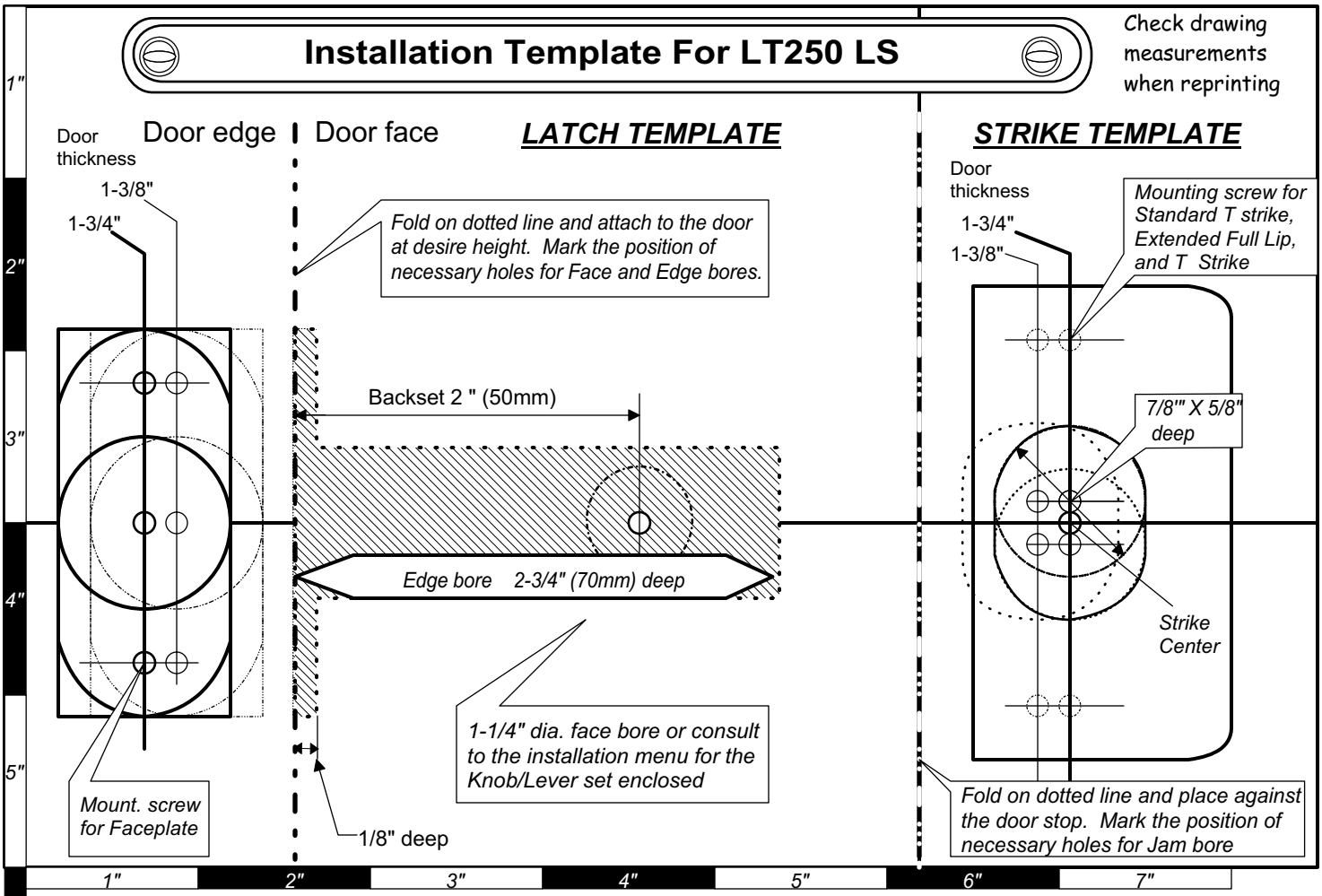

Check drawing measurements when reprinting
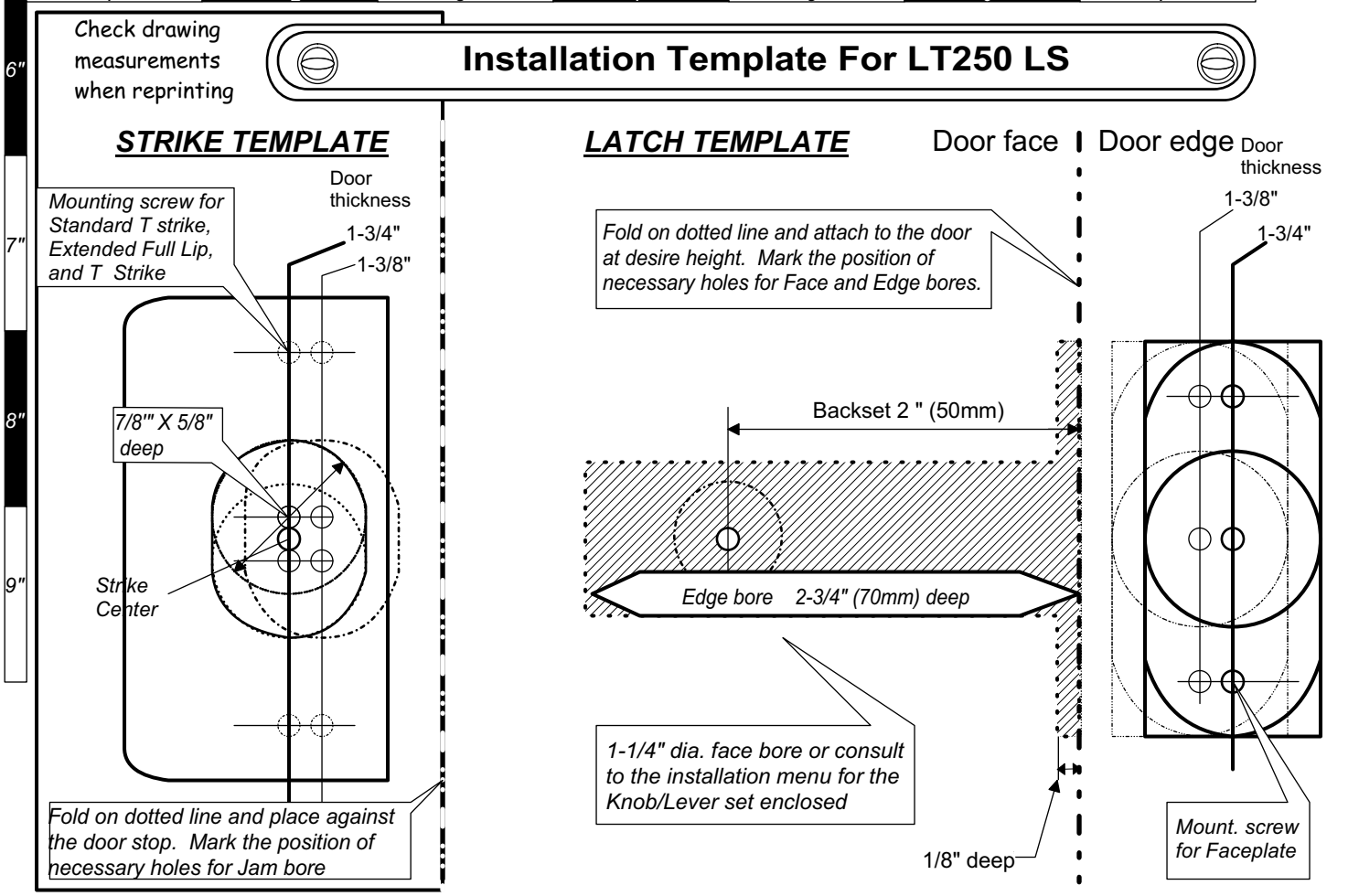
Installation Template For LT250 LS